YAMAHA

PARTS CATALOGUE

YFM90RB (43DB) CANADA
YFM90RB (43DC) EUROPE
YFM90RB (43DA) OCEANIA
YFM90RB (43DA) MEXICO

1L43D-100E1

( )

YAMAHA
GENUINE
Parts & Accessories

YFM90RB
PARTS CATALOGUE
©2011 by Yamaha Motor Co., Ltd.
1st edition, May 2011
All rights reserved.
Any reprinting or unauthorized use
without the written permission of
Yamaha Motor Co., Ltd.
is expressly prohibited.
Printed in Japan.

FOREWORD

This Parts Catalogue is related to the parts for the model(s) on the cover page. When you are ordering replacement parts, please refer to this Parts Catalogue and quote both part numbers and part names correctly.

1. Modifications or additions which have been made after the issue of the Parts Catalogue will be announced in the Parts News.
   It is advisable that you make the necessary corrections to the Parts Catalogue according to the Parts News.

2. Abbreviations
   The following abbreviations are used in this Parts Catalogue.

   “UR” Use specified parts number.
   “UN” Use as many as needed.
   “AP” Alternate Parts
   “LM” Locally Made (Parts need to be ordered locally)
   “F#” Frame No. (Applicable machine No.)
   “O/S” Over Size

3. The number of components for assembly
   - Parts, which are to be supplied in an assembly, are listed with a dot (.) in front of the part name as shown below.
   - The numeral appearing to the right of each component part indicates the quantity of parts for each assembly unit.

PART NO.	DESCRIPTION	Q’TY	REMARKS
2F5–83310–60	FRONT FLASHER LIGHT ASSY	2	
115–83311–60	.BULB (6V–18W)	1	

4. Applicable colours of graphics are represented in the “REMARKS” as shown below.

PART NO.	DESCRIPTION	Q’TY	REMARKS
2N4–24110–00–X5	FUEL TANK COMP.	2	MXR
3J1–24240–10	.GRAPHIC, FUEL TANK	1	FOR MXR

5. Note that the illustrations for reference in finding parts numbers are not to be used for assembling. When assembling, please use the applicable service manual.

6. The asterisk (*) before a reference number indicates modified items after the first edition.

7. Applicable Serial No.

Engine Serial No.

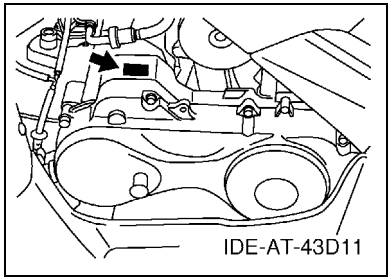

Frame Serial No.

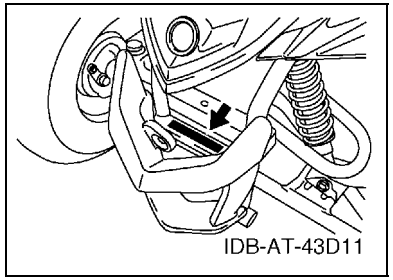

8. Applicable Colour Code (The (*) mark shows Model colour.)

Abbreviation	Colour Name	Colour Code
BWS1(*)	BLUISH WHITE SOLID 1	0892
DPBSE(*)	DEEP PURPLISH BLUE SOLID E	0583

9. Quantity Column Information

Column No.	Name Of Q’ty Column	Destination
1	CAN	CANADA
2	EUR	EUROPE
3	OCE	OCEANIA
4	MEX	MEXICO

MODEL LABEL

(1) A label called “Model Label” is affixed in the location as indicated in (3) below.
When using this parts catalogue, please be sure to cross–reference the “model code – production code No.” in the catalogue with the “model code – production code No.” indicated on the Model Label affixed onto the product concerned.

(2) “Model Label” Indication

	a b
○	xxxx – xxx
●	x c

a: Model Type Code
b: Production Code No.
c: Colouring Type

○	4TW1–010
●	A

(3) Model Label Affixing Location

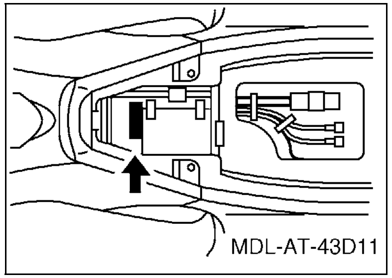

(4) Colouring Information

Model Code	Colouring Type Code	Colour Code	Colour Name	Abbrevia-tion
43DA	A	0583	DEEP PURPLISH BLUE SOLID E	DPBSE
	B	0892	BLUISH WHITE SOLID 1	BWS1
43DB	A	0583	DEEP PURPLISH BLUE SOLID E	DPBSE
43DC	A	0583	DEEP PURPLISH BLUE SOLID E	DPBSE

(5) Model Code – Production Code Number of Model Listed in This Parts Catalogue

Model Code	Production Code No.	Country (destination)	Model Code	Production Code No.	Country (destination)
43DA	020	AUSTRALIA			
		NEW ZEALAND			
	040	MEXICO			
43DB	010	CANADA			
43DC	010	FRANCE			
		UNITED KINGDOM			

CONTENTS

ENGINE

CYLINDER 1
CRANKSHAFT & PISTON 2
VALVE 3
CAMSHAFT & CHAIN 4
AIR SHROUD & FAN 5
OIL PUMP 6
INTAKE 7
CARBURETOR 8
EXHAUST 10
CRANKCASE 11
STARTER 13
CLUTCH 14
TRANSMISSION 15

CHASSIS

FRAME 16
FRONT FENDER 17
REAR FENDER 18
REAR ARM 19
STEERING 20
FRONT SUSPENSION & WHEEL 21
FUEL TANK 22
SEAT 23
FRONT WHEEL 24
REAR WHEEL 27
REAR BRAKE CALIPER 28
STEERING HANDLE & CABLE 29
REAR MASTER CYLINDER 31
STAND & FOOTREST 32
GUARD 33
GENERATOR 34
STARTING MOTOR 35
HEADLIGHT 36
ELECTRICAL 1 37
ELECTRICAL 2 38
GRAPHICS 39
EMBLEM & LABEL 1 40
EMBLEM & LABEL 2 41
EMBLEM & LABEL 3 42

INDEX

NUMERICAL INDEX 43

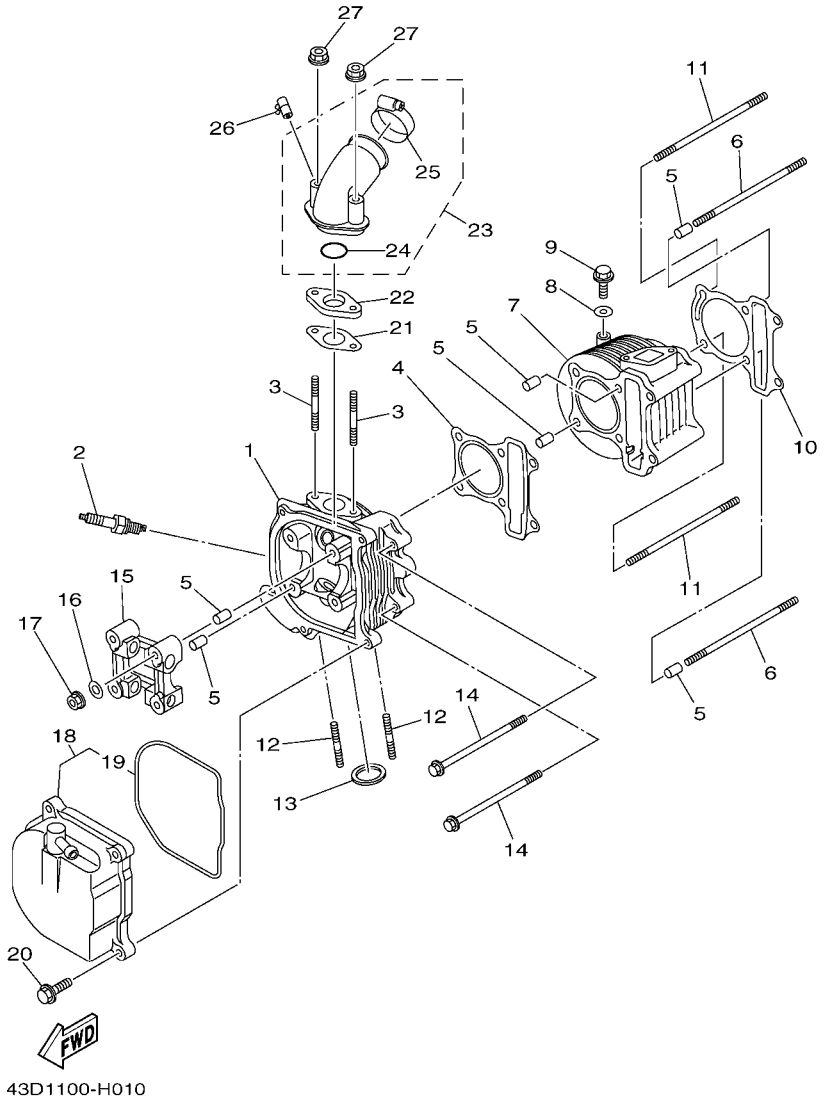

FIG. 1 CYLINDER

REF. NO.	PART NO.	DESCRIPTION	CAN	EUR	OCE	MEX		REMARKS
1	43D–E1102–00	CYLINDER HEAD ASSY	1	1	1	1		
2	94701–00366	PLUG, SPARK (NGK CR7HSA)	1	1	1	1		
3	43D–E1179–00	BOLT, STUD	2	2	2	2		
4	43D–E1181–00	GASKET, CYLINDER HEAD 1	1	1	1	1		
5	43D–E3516–00	PIN, DOWEL	6	6	6	6		
6	43D–E1392–00	BOLT, STUD 2	2	2	2	2		
7	43D–E1311–00	CYLINDER 1	1	1	1	1		
8	43D–E3177–00	WASHER	1	1	1	1		
9	95827–06012	BOLT, FLANGE	1	1	1	1		
10	43D–E1351–00	GASKET, CYLINDER	1	1	1	1		
11	43D–E2174–00	BOLT, STUD	2	2	2	2		
12	43D–E1391–00	BOLT, STUD 1	2	2	2	2		
13	43D–E1195–00	GASKET	1	1	1	1		
14	95022–06100	BOLT, FLANGE	2	2	2	2		
15	43D–E2173–00	CAP, CAMSHAFT 1	1	1	1	1		
16	43D–E3318–00	WASHER	4	4	4	4		
17	43D–E4439–00	NUT	4	4	4	4		
18	43D–E1190–00	COVER, CYLINDER HEAD 1	1	1	1	1		
19	43D–E1182–00	.GASKET, CYLINDER HEAD 2	1	1	1	1		
20	95027–06020	BOLT, FLANGE	4	4	4	4		
21	43D–E3556–00	GASKET, MANIFOLD	1	1	1	1		
22	43D–E4271–00	INSULATOR	1	1	1	1		
23	43D–E3590–00	CARBURETOR JOINT ASSY	1	1	1	1		
24	43D–E119B–00	.O-RING	1	1	1	1		
25	43D–E3575–00	.BAND	1	1	1	1		
26	43D–E3569–00	PLUG, BLIND	1	1	1	1		
27	43D–E4358–00	NUT	2	2	2	2		

FIG. 2 CRANKSHAFT & PISTON

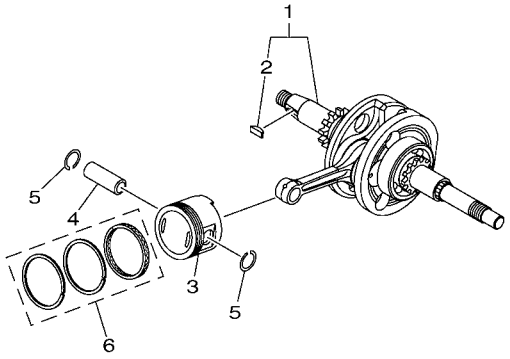

43D1100-H020

REF. NO.	PART NO.	DESCRIPTION	CAN	EUR	OCE	MEX		REMARKS
1	43D–E1400–00	CRANKSHAFT ASSY	1	1	1	1		
2	43D–E1545–00	.KEY, WOODRUFF	1	1	1	1		
3	43D–E1631–00	PISTON (STD)	1	1	1	1		
4	43D–E1633–00	PIN, PISTON	1	1	1	1		
5	43D–E1634–00	CLIP, PISTON PIN	2	2	2	2		
6	43D–E1610–00	PISTON RING SET (STD)	1	1	1	1		

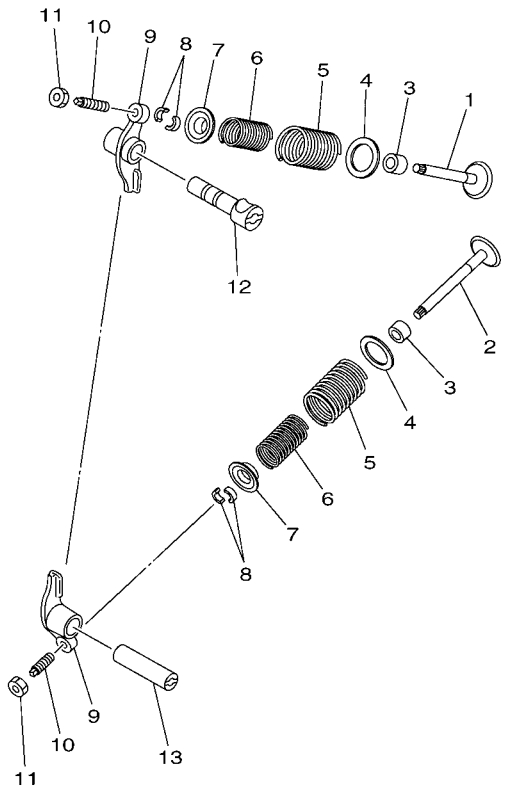

43D1100-H030

FIG. 3 VALVE

REF. NO.	PART NO.	DESCRIPTION	CAN	EUR	OCE	MEX		REMARKS
1	43D–E2111–00	VALVE, INTAKE	1	1	1	1		
2	43D–E2121–00	VALVE, EXHAUST	1	1	1	1		
3	43D–E2119–00	SEAL, VALVE STEM	2	2	2	2		
4	43D–E3578–00	WASHER	2	2	2	2		
5	43D–E2114–00	SPRING, VALVE OUTER	2	2	2	2		
6	43D–E2113–00	SPRING, VALVE INNER	2	2	2	2		
7	43D–E2117–00	RETAINER, VALVE SPRING	2	2	2	2		
8	43D–E2118–00	COTTER, VALVE	4	4	4	4		
9	43D–E2151–00	ARM, VALVE ROCKER	2	2	2	2		
10	43D–E2159–00	SCREW, VALVE ADJUSTING	2	2	2	2		
11	95307–05600	NUT	2	2	2	2		
12	43D–E2146–00	SHAFT, ROCKER	1	1	1	1		
13	43D–E2156–00	SHAFT, ROCKER 2	1	1	1	1		

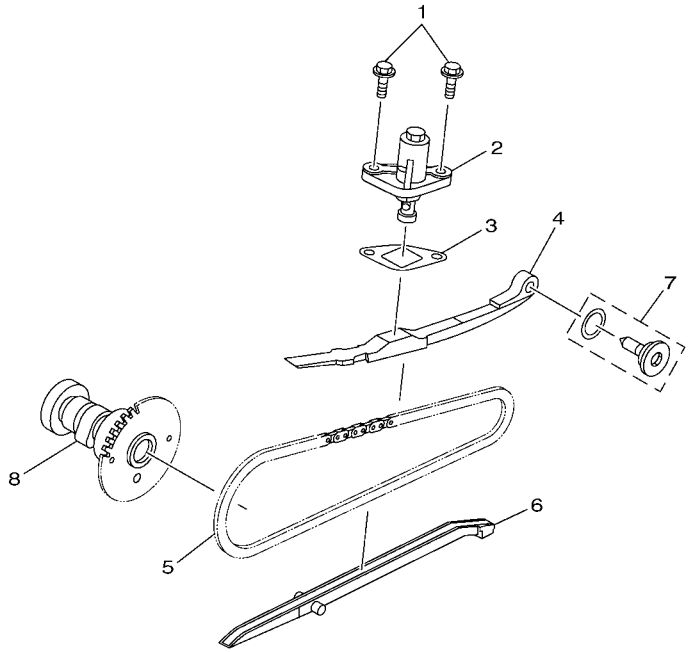

43D1100-H040

FIG. 4 CAMSHAFT & CHAIN

REF. NO.	PART NO.	DESCRIPTION	CAN	EUR	OCE	MEX		REMARKS
1	95022–06016	BOLT, FLANGE	2	2	2	2		
2	43D–E2210–00	TENSIONER ASSY, CAM CHAIN	1	1	1	1		
3	43D–E2213–00	GASKET, TENSIONER CASE	1	1	1	1		
4	43D–E2241–00	GUIDE, STOPPER 2	1	1	1	1		
5	43D–E2190–00	CHAIN ASSY	1	1	1	1		
6	43D–E2231–00	GUIDE, STOPPER 1	1	1	1	1		
7	43D–E22C0–00	BOLT SET	1	1	1	1		
8	43D–E21K0–00	CAMSHAFT COMP.	1	1	1	1		

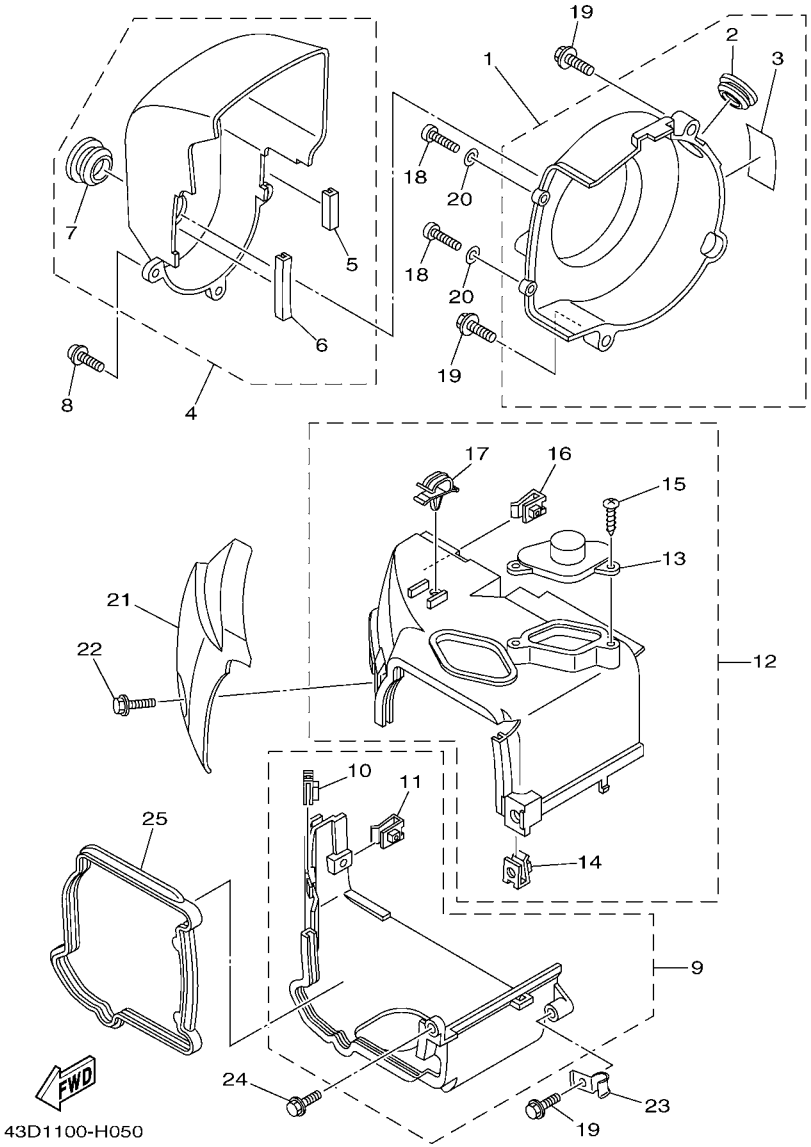

FIG. 5 AIR SHROUD & FAN

REF. NO.	PART NO.	DESCRIPTION	CAN	EUR	OCE	MEX		REMARKS
1	43D–E2660–00	AIR SHROUD ASSY	1	1	1	1		
2	43D–E261B–00	.GROMMET SHROUD 1	1	1	1	1		
3	43D–E3889–00	.LABEL	1	1	1	1		
4	43D–E2601–00	DUCT INLET COMP.	1	1	1	1		
5	43D–E2659–00	.DAMPER, AIR SHROUD 2	1	1	1	1		
6	43D–E2668–00	.DAMPER, AIR SHROUD 3	1	1	1	1		
7	43D–E261C–00	.GROMMET SHROUD 2	1	1	1	1		
8	43D–E4216–00	SCREW	3	3	3	3		
9	43D–E2620–00	AIR SHROUD ASSY	1	1	1	1		
10	43D–E261D–00	.NUT SPRING 1	1	1	1	1		
11	43D–E261F–00	.NUT SPRING 2	1	1	1	1		
12	43D–E2650–00	AIR SHROUD ASSY.,2	1	1	1	1		
13	43D–E261J–00	.COVER 1	1	1	1	1		
14	43D–E261D–00	.NUT SPRING 1	1	1	1	1		
15	43D–E4567–00	.SCREW	2	2	2	2		
16	43D–E261F–00	.NUT SPRING 2	1	1	1	1		
17	43D–E261G–00	.CLAMP 2	1	1	1	1		
18	43D–E4325–00	SCREW, PAN HEAD	2	2	2	2		
19	95027–06020	BOLT, FLANGE	3	3	3	3		
20	43D–E4475–00	WASHER	2	2	2	2		
21	43D–E261K–00	COVER 2	1	1	1	1		
22	95827–06025	BOLT, FLANGE	1	1	1	1		
23	43D–E262K–00	CLAMP 1	1	1	1	1		
24	95022–06016	BOLT, FLANGE	1	1	1	1		
25	43D–E261H–00	SEAL 1	1	1	1	1		

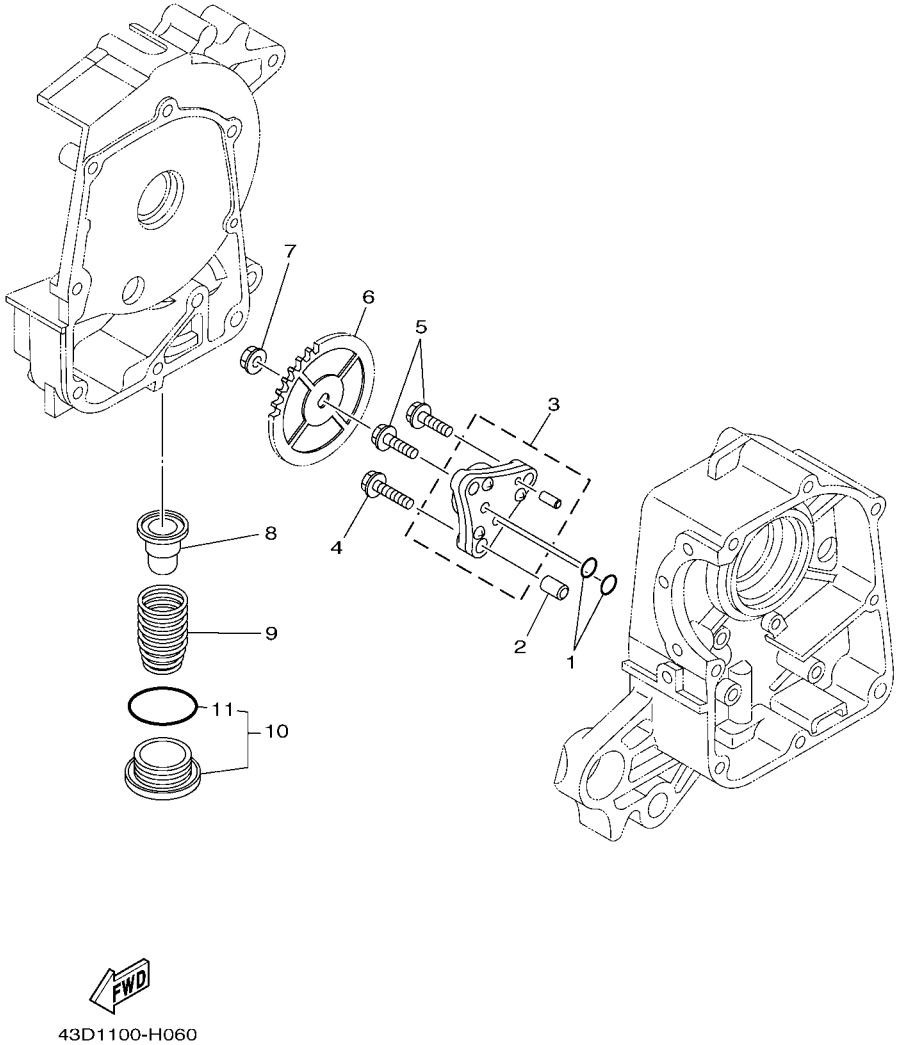

FIG. 6 OIL PUMP

REF. NO.	PART NO.	DESCRIPTION	CAN	EUR	OCE	MEX		REMARKS
1	43D–E119A–00	O-RING	2	2	2	2		
2	43D–E5181–00	PIN, DOWEL	1	1	1	1		
3	43D–E3300–00	OIL PUMP ASSY	1	1	1	1		
4	95027–06020	BOLT, FLANGE	1	1	1	1		
5	95022–06020	BOLT, FLANGE	2	2	2	2		
6	43D–E3325–00	GEAR, PUMP DRIVEN	1	1	1	1		
7	43D–E4358–00	NUT	1	1	1	1		
8	43D–E3411–00	STRAINER, OIL	1	1	1	1		
9	43D–E3469–00	SPRING	1	1	1	1		
10	43D–E5300–00	DRAIN PLUG SET	1	1	1	1		
11	43D–E319C–00	.O-RING	1	1	1	1		

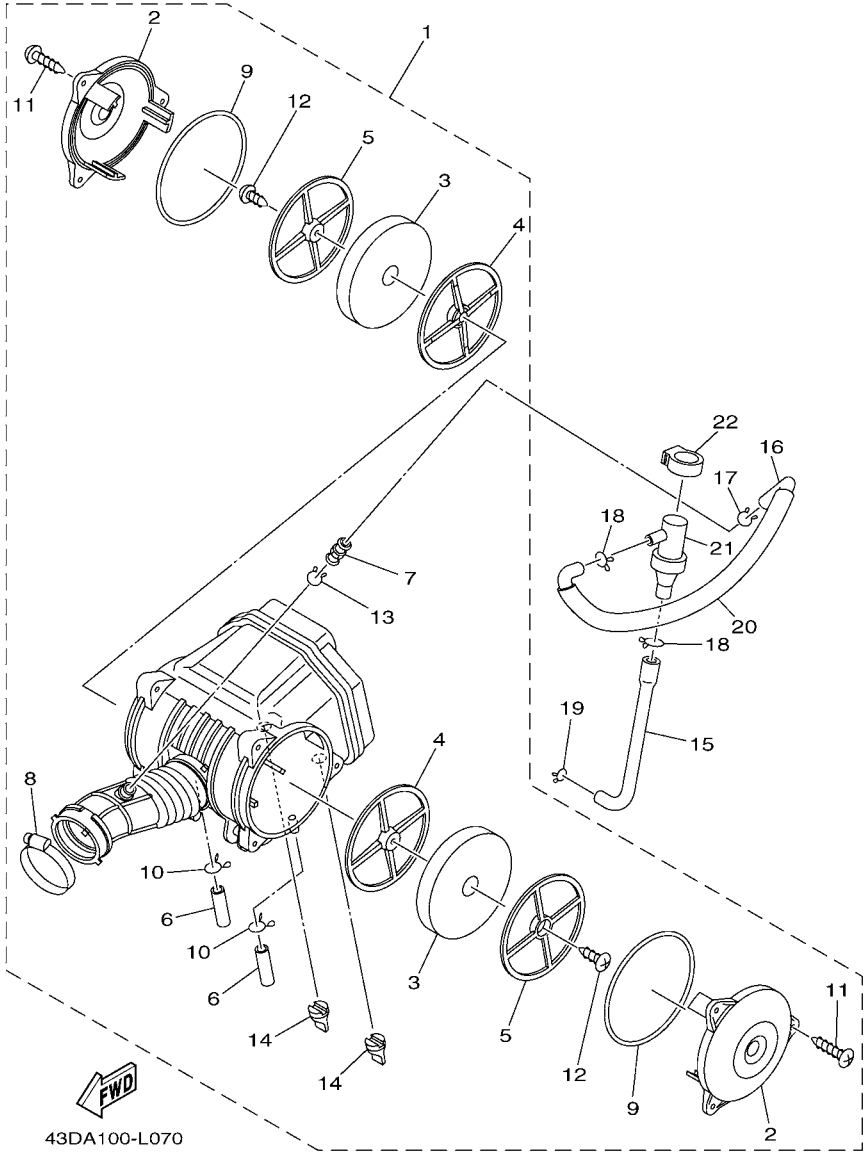

FIG. 7 INTAKE

REF. NO.	PART NO.	DESCRIPTION	CAN	EUR	OCE	MEX		REMARKS
1	43D–E4410–10	AIR CLEANER ASSY.	1	1	1	1		
2	43D–E449E–10	.COVER, AIR CLEANER	2	2	2	2		
3	43D–E4451–00	.ELEMENT, AIR CLEANER	2	2	2	2		
4	43D–E4468–10	.PLATE,ELEMENT FITTING	2	2	2	2		
5	43D–E440H–00	.PLATE ELEMENT SET 2	2	2	2	2		
6	43D–E443E–10	.PIPE, DRAIN	2	2	2	2		
7	43D–E4419–00	.PIPE	1	1	1	1		
8	43D–E4455–00	.BAND	2	2	2	2		
9	43D–E41A1–00	.SEAL RING	2	2	2	2		
10	43D–E4137–10	.CLIP	2	2	2	2		
11	43D–E4429–10	.SCREW	6	6	6	6		
12	43D–E5793–00	.SCREW	2	2	2	2		
13	43D–E4159–00	.CLIP	1	1	1	1		
14	43D–E4222–00	.VALVE, DRAIN	2	2	2	2		
15	43D–E4148–00	PIPE	1	1	1	1		
16	43D–E4149–00	PIPE	1	1	1	1		
17	43D–E4159–00	CLIP	2	2	2	2		
18	43D–E449C–00	CLIP 1	1	1	1	1		
19	43D–E449D–00	CLIP 2	1	1	1	1		
20	43D–E442F–00	PROTECTOR	1	1	1	1		
21	43D–E1126–00	PIPE, BREATHER 3	1	1	1	1		
22	43D–E4169–00	CAP	1	1	1	1		

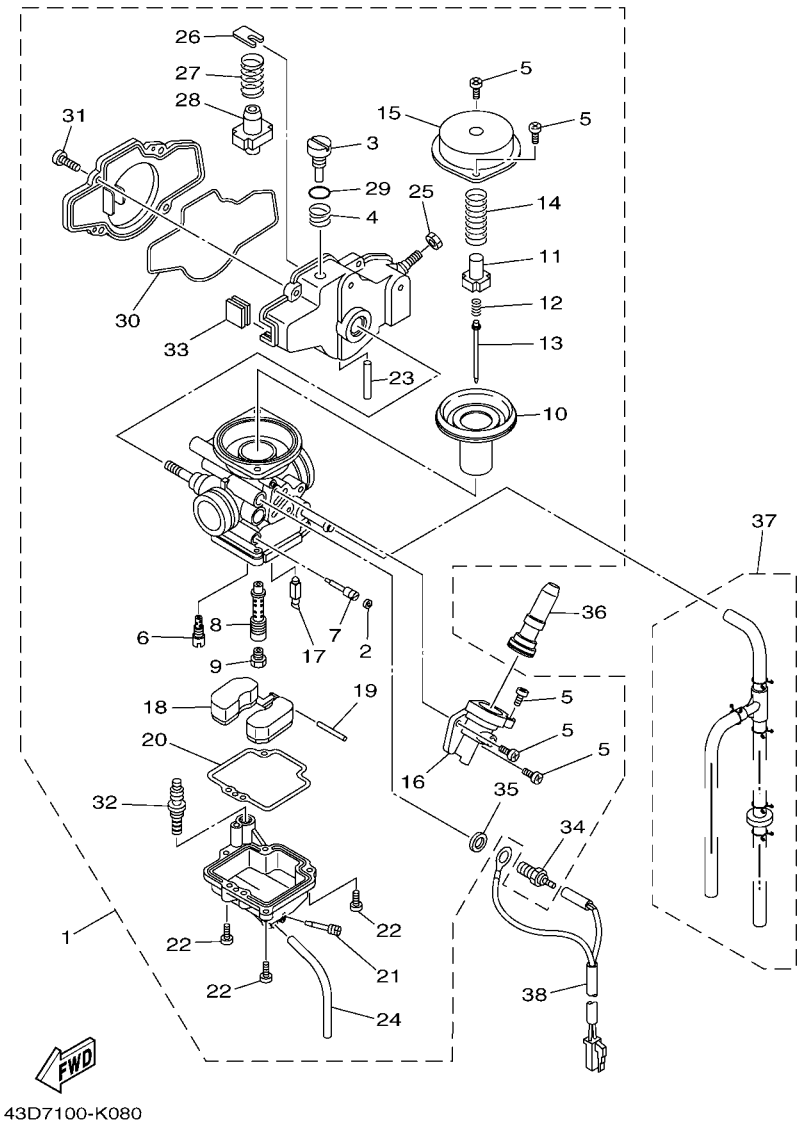

FIG. 8 CARBURETOR

REF. NO.	PART NO.	DESCRIPTION	CAN	EUR	OCE	MEX		REMARKS
1	43D–E4301–00	CARBURETOR ASSY 1	1					
	43D–E4301–10	CARBURETOR ASSY 1		1	1	1		
2	43D–E4345–00	.PLUG, MAIN NOZZLE	1					
3	43D–E4321–00	.SCREW, THROTTLE	1	1	1	1		
4	43D–E4333–00	.SPRING, THROTTLE STOP	1	1	1	1		
5	98502–04008	.SCREW, PAN HEAD	5	5	5	5		
6	43D–E4342–16	.JET, PILOT (# 32)	1	1	1	1		
7	43D–E4347–00	.PILOT SCREW SET	1	1	1	1		
8	43D–E4341–00	.NOZZLE, MAIN	1	1	1	1		
9	288–E4343–50	.JET, MAIN (#100)	1	1	1	1		
10	5WB–E434A–00	.DIAPHRAGM	1	1	1	1		
11	5LB–E4936–00	.SEAT, SPRING	1	1	1	1		
12	5LB–E4275–00	.SPRING	1	1	1	1		
13	43D–E4336–00	.NEEDLE	1					
	43D–E4336–10	.NEEDLE		1	1	1		
14	5WB–E4286–00	.SPRING	1	1	1	1		
15	43D–E439D–00	.CAP, MIXING CHAMBER	1	1	1	1		
16	43D–E4344–00	.JET, STARTER (# 0)	1	1	1	1		
17	43D–E4392–00	.VALVE, NEEDLE	1	1	1	1		
18	5WB–E4385–00	.FLOAT	1	1	1	1		
19	5LB–E4386–00	.PIN, FLOAT	1	1	1	1		
20	5WB–E4384–00	.GASKET, FLOAT CHAMBER	1	1	1	1		
21	43D–E4306–00	.DRAIN SCREW ASSY	1	1	1	1		
22	98502–04014	.SCREW, PAN HEAD	3	3	3	3		
23	43D–E443G–00	.PIPE, DRAIN 2	1	1	1	1		
24	4FP–E4349–00	.PIPE	1	1	1	1		
25	5AV–E4594–00	.NUT	1	1	1	1		

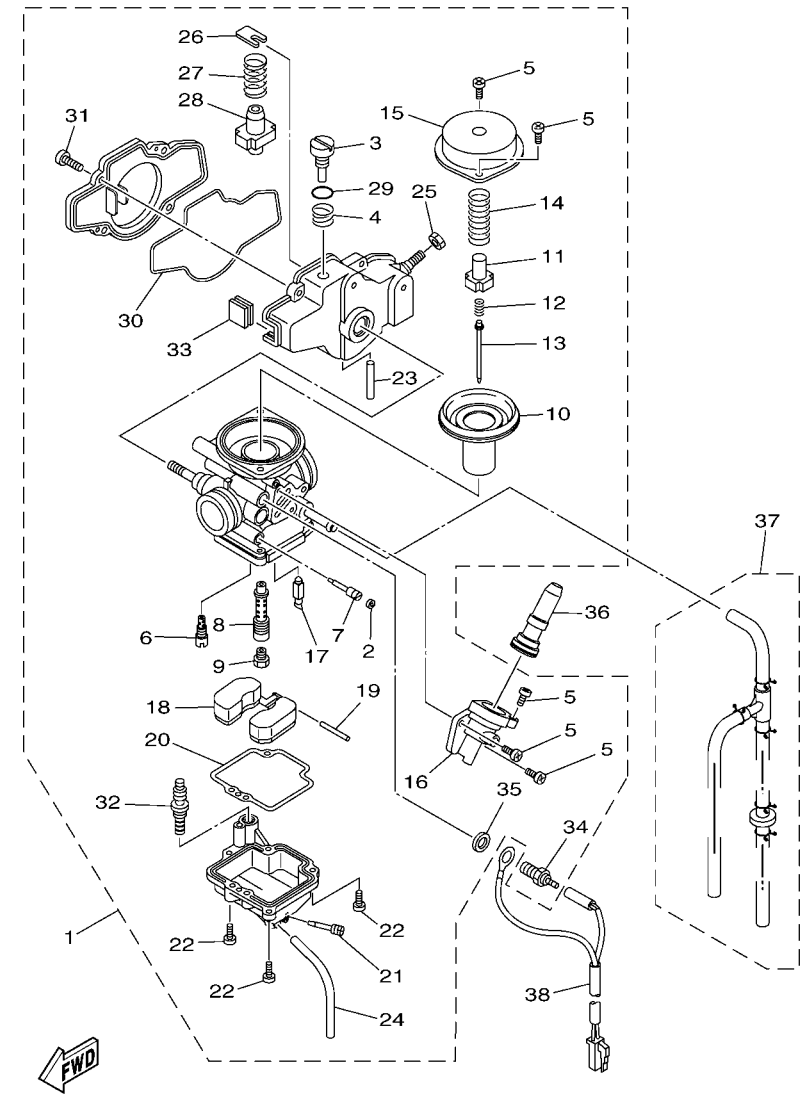

43D7100-K080

FIG. 8 CARBURETOR

REF. NO.	PART NO.	DESCRIPTION	CAN	EUR	OCE	MEX		REMARKS
26	43D–E4346–00	.PLATE	1	1	1	1		
27	43D–E4333–10	.SPRING, THROTTLE STOP	1	1	1	1		
28	43D–E4321–10	.ADJUSTER,THROTTLE	1	1	1	1		
29	43D–E4397–10	.O-RING	1	1	1	1		
30	43D–E4398–00	.GASKET	1	1	1	1		
31	98502–04010	.SCREW, PAN HEAD	4	4	4	4		
32	43D–E4304–00	.ACCELERATOR PUMP COMP.	1	1	1	1		
33	43D–E432A–00	.PLUG	1	1	1	1		
34	5FU–83790–20	.HEATER ASSY (30W)	1	1	1	1		
35	90201–08016	.WASHER, PLATE	1	1	1	1		
36	43D–E4307–00	STARTER ASSY	1	1	1	1		
37	43D–E4310–00	TUBE BREATHER COMP.	1	1	1	1		
38	43D–H331N–01	WIRE, LEAD	1	1	1	1		

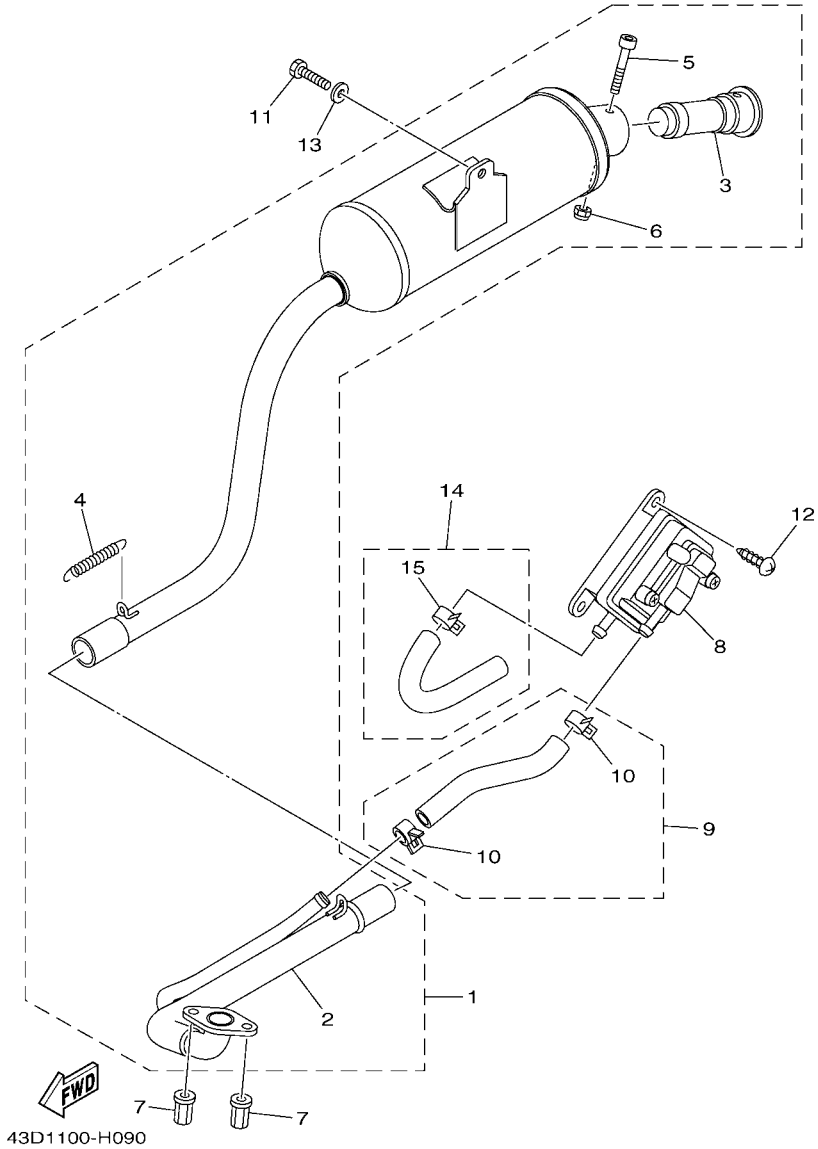

FIG. 9 EXHAUST

REF. NO.	PART NO.	DESCRIPTION	CAN	EUR	OCE	MEX		REMARKS
1	43D–E4610–00	EXHAUST PIPE ASSY 1	1	1	1	1		
2	43D–E461A–00	.BODY, PIPE 1-1	1	1	1	1		
3	43D–E4752–00	.PIPE, OUTLET	1	1	1	1		
4	43D–E4773–00	.SPRING, MUFFLER	1	1	1	1		
5	43D–E3574–00	.BOLT 2	1	1	1	1		
6	43D–E4595–00	.NUT	1	1	1	1		
7	43D–E2671–00	NUT 1	2	2	2	2		
8	43D–E4803–00	AIR INDUCTION SYSTEM ASSY	1	1	1	1		
9	43D–E48D0–00	CONNECTING TUBE ASSY	1	1	1	1		
10	43D–E4919–00	.CLIP	2	2	2	2		
11	43D–F2125–10	BOLT	1	1	1	1		
12	43D–E4565–00	SCREW	2	2	2	2		
13	43D–E4759–00	WASHER	1	1	1	1		
14	43D–E48A0–00	HOSE ASSY	1	1	1	1		
15	43D–E4919–00	.CLIP	1	1	1	1		

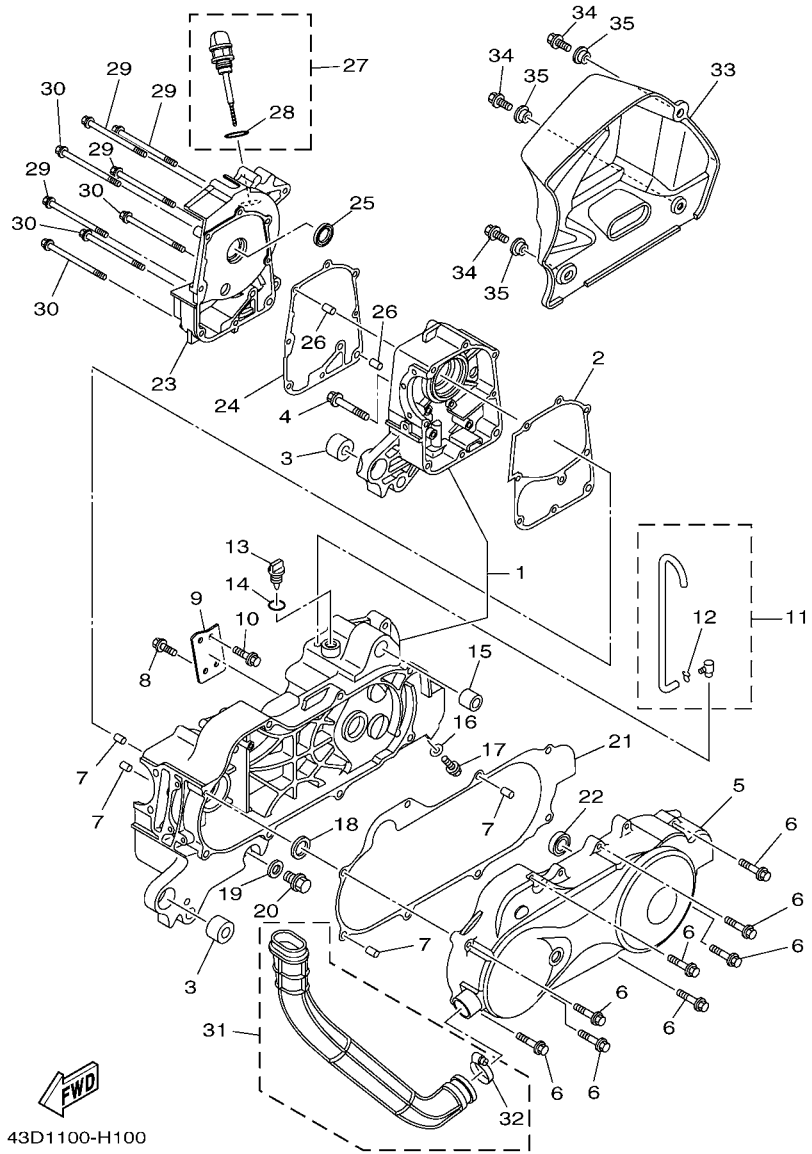

FIG. 10 CRANKCASE

REF. NO.	PART NO.	DESCRIPTION	CAN	EUR	OCE	MEX		REMARKS
1	43D–E5100–00	CRANKCASE ASSY	1	1	1	1		
2	43D–E5314–00	GASKET, CRANKCASE 1	1	1	1	1		
3	43D–E5526–00	BUSH	2	2	2	2		
4	43D–E2157–00	BOLT	1	1	1	1		
5	43D–E5411–00	COVER, CRANKCASE 1	1	1	1	1		
6	95022–06035	BOLT, FLANGE	8	8	8	8		
7	43D–E5181–00	PIN, DOWEL	4	4	4	4		
8	95022–06012	BOLT, FLANGE	2	2	2	2		
9	43D–E5199–00	BRACKET	1	1	1	1		
10	43D–E2228–00	BOLT	2	2	2	2		
11	43D–E1104–00	BREATHER PIPE ASSY	1	1	1	1		
12	43D–E1188–00	.CLIP, PIPE	1	1	1	1		
13	43D–E5363–00	PLUG, OIL	1	1	1	1		
14	43D–E5114–00	O-RING	1	1	1	1		
15	43D–E5582–00	BUSH	1	1	1	1		
16	43D–E1557–00	WASHER 1	1	1	1	1		
17	95822–08012	BOLT, FLANGE	1	1	1	1		
18	43D–E511B–00	OIL SEAL	1	1	1	1		
19	43D–E5561–00	WASHER	1	1	1	1		
20	43D–E5341–00	PLUG, DRAIN	1	1	1	1		
21	43D–E1541–00	METAL, FILLER	1	1	1	1		
22	43D–E7166–00	BEARING 2	1	1	1	1		
23	43D–E5421–00	COVER, CRANKCASE 2	1	1	1	1		
24	43D–E5461–00	GASKET, CRANKCASE COVER 2	1	1	1	1		
25	43D–E511A–00	OIL SEAL	1	1	1	1		
26	43D–E5181–00	PIN, DOWEL	2	2	2	2		
27	43D–E536A–00	PLUG, OIL LEVEL	1	1	1	1		

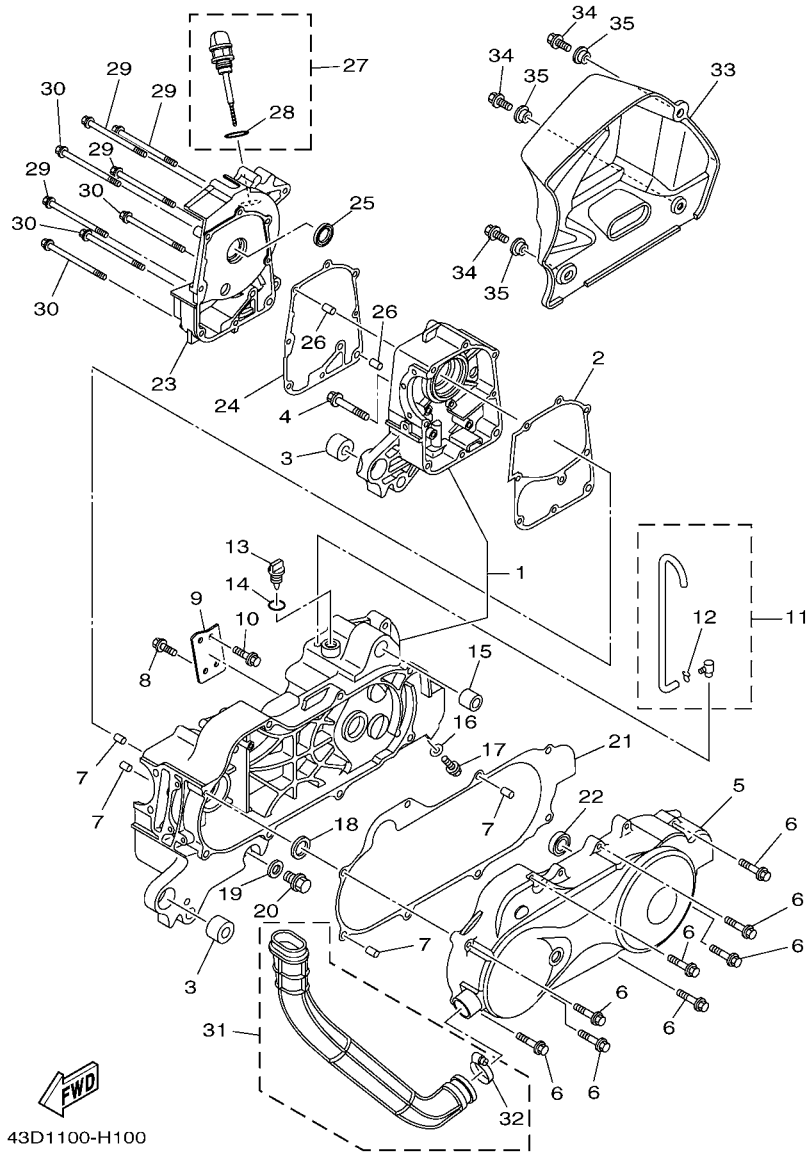

FIG. 10 CRANKCASE

REF. NO.	PART NO.	DESCRIPTION	CAN	EUR	OCE	MEX		REMARKS
28	43D–E511C–00	.OIL SEAL	1	1	1	1		
29	43D–E2615–00	BOLT	4	4	4	4		
30	95022–06100	BOLT, FLANGE	4	4	4	4		
31	43D–E5470–00	AIR DUCT ASSY	1	1	1	1		
32	43D–E54F3–00	.BAND	1	1	1	1		
33	43D–E5418–00	COVER, CHAIN CASE	1	1	1	1		
34	95827–06016	BOLT, FLANGE	3	3	3	3		
35	43D–F1116–00	COLLAR	3	3	3	3		

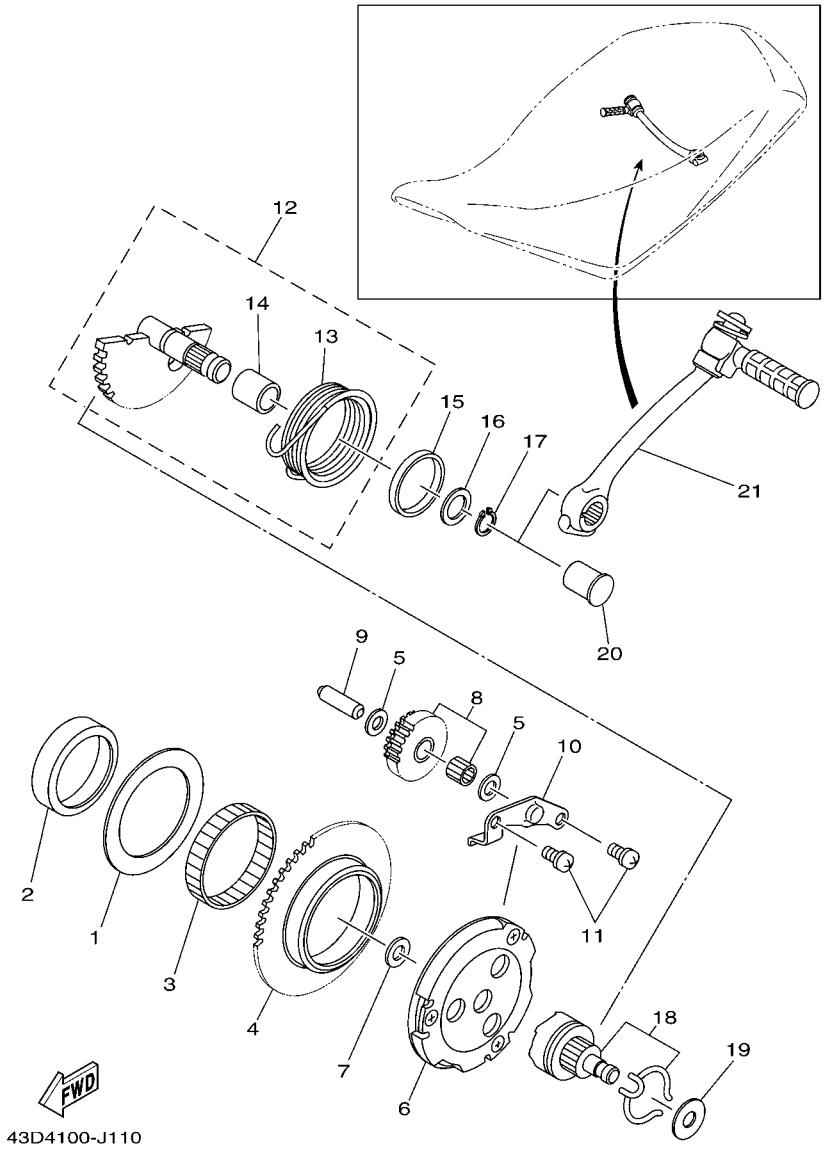

FIG. 11 STARTER

REF. NO.	PART NO.	DESCRIPTION	CAN	EUR	OCE	MEX		REMARKS
1	43D–E1558–00	WASHER 2	1	1	1	1		
2	43D–E5538–00	BOSS, GEAR 2	1	1	1	1		
3	43D–E5596–00	BEARING	1	1	1	1		
4	43D–E5524–00	WHEEL, STARTER	1	1	1	1		
5	43D–E3995–00	WASHER	2	2	2	2		
6	43D–E5570–00	STARTER CLUTCH ASSY	1	1	1	1		
7	43D–E2289–00	WASHER	1	1	1	1		
8	43D–E5640–00	KICK GEAR ASSY	1	1	1	1		
9	43D–E3342–00	SHAFT, IDLE GEAR	1	1	1	1		
10	43D–E5532–00	PLATE, IDLE GEAR	1	1	1	1		
11	43D–E1834–00	SCREW	2	2	2	2		
12	43D–E5600–00	KICK SHAFT UNIT ASSY	1	1	1	1		
13	43D–E5665–00	.SPRING, KICK	1	1	1	1		
14	43D–E5677–00	.BOSS, KICK AXLE	1	1	1	1		
15	43D–E5666–00	SPACER	1	1	1	1		
16	43D–E2456–00	WASHER	1	1	1	1		
17	43D–E5597–00	CIRCLIP 2	1	1	1	1		
18	43D–E5650–00	IDLE GEAR ASSY	1	1	1	1		
19	43D–E2664–00	WASHER	1	1	1	1		
20	43D–E6773–00	CAP	1	1	1	1		
21	43D–E5620–00	KICK CRANK ASSY	1	1	1	1		

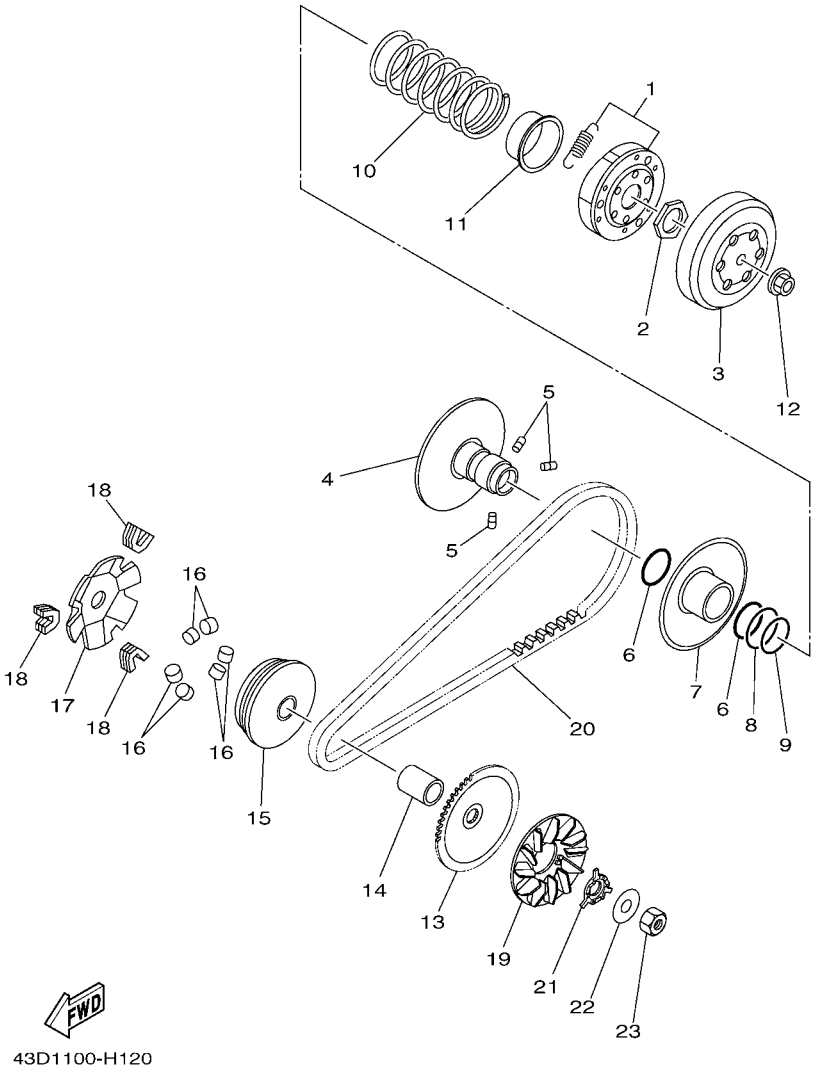

FIG. 12 CLUTCH

REF. NO.	PART NO.	DESCRIPTION	CAN	EUR	OCE	MEX		REMARKS
1	43D–E6620–00	CLUTCH CARRIER ASSY	1	1	1	1		
2	43D–E4594–00	NUT	1	1	1	1		
3	43D–E6611–00	CLUTCH HOUSING COMP.	1	1	1	1		
4	43D–E7660–00	SECONDARY FIXED SHEAVE COMP.	1	1	1	1		
5	43D–E7664–00	PIN, GUIDE	3	3	3	3		
6	43D–E76F3–00	OIL SEAL	2	2	2	2		
7	43D–E7670–00	SECONDARY SLIDING SHEAVE	1	1	1	1		
8	43D–E76F4–00	O-RING	1	1	1	1		
9	43D–E76F5–00	O-RING	1	1	1	1		
10	43D–E7683–00	SPRING, SECONDARY	1	1	1	1		
11	43D–E7684–00	SEAT, SECONDARY SPRING	1	1	1	1		
12	43D–E2672–00	NUT 2	1	1	1	1		
13	43D–E76F6–00	SHEAVE, PRIMARY FIXED 2	1	1	1	1		
14	43D–E7645–00	COLLAR	1	1	1	1		
15	43D–E7620–00	PRIMARY SLIDING SHEAVE COMP.	1	1	1	1		
16	43D–E7632–00	WEIGHT	6	6	6	6		
17	43D–E7623–00	CAM	1	1	1	1		
18	43D–E7653–00	SLIDER	3	3	3	3		
19	43D–E7611–00	SHEAVE, PRIMARY FIXED	1	1	1	1		
20	43D–E7641–00	V-BELT	1	1	1	1		
21	43D–E5657–00	CLUTCH, ONEWAY	1	1	1	1		
22	43D–E2673–00	WASHER	1	1	1	1		
23	43D–E3588–00	NUT	1	1	1	1		

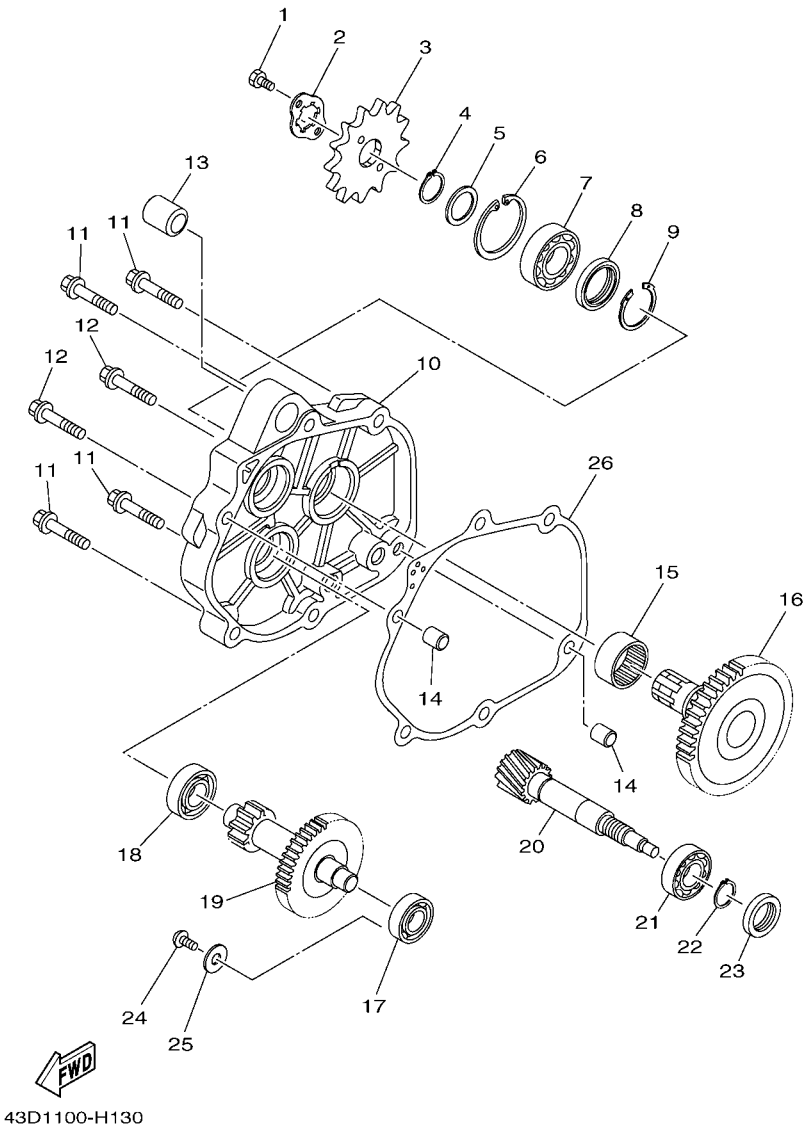

FIG. 13 TRANSMISSION

REF. NO.	PART NO.	DESCRIPTION	CAN	EUR	OCE	MEX		REMARKS
1	97022–06010	BOLT	2	2	2	2		
2	43D–E7464–00	WASHER, LOCK	1	1	1	1		
3	43D–E7461–00	SPROCKET, DRIVE (13T)	1	1	1	1		
4	43D–F3183–00	CIRCLIP	1	1	1	1		
5	43D–E4285–00	WASHER	1	1	1	1		
6	43D–F5415–00	CIRCLIP	1	1	1	1		
7	43D–E7412–00	JOURNAL	1	1	1	1		
8	43D–E7465–00	OIL SEAL	1	1	1	1		
9	43D–E2842–00	CIRCLIP	1	1	1	1		
10	43D–E7471–09	PLATE, COVER	1	1	1	1		
11	95822–08035	BOLT, FLANGE	4	4	4	4		
12	95822–08040	BOLT, FLANGE	2	2	2	2		
13	43D–E5582–00	BUSH	1	1	1	1		
14	43D–E7498–00	PIN, DOWEL	2	2	2	2		
15	43D–E7413–00	JOURNAL 2	1	1	1	1		
16	43D–E7420–00	DRIVE AXLE ASSY	1	1	1	1		
17	43D–E7422–00	JOURNAL 1	1	1	1	1		
18	43D–E7423–00	JOURNAL 2	1	1	1	1		
19	43D–E7410–00	MAIN AXLE COMP. (13T/41T)	1	1	1	1		
20	43D–E7431–00	AXLE, COUNTER	1	1	1	1		
21	43D–E7156–00	BEARING 1	1	1	1	1		
22	43D–E5744–00	CIRCLIP	1	1	1	1		
23	43D–E7499–00	OIL SEAL	1	1	1	1		
24	43D–E2614–00	SCREW	1	1	1	1		
25	43D–E2674–00	WASHER	1	1	1	1		
26	43D–E7518–09	GASKET, MIDDLE GEAR CASE	1	1	1	1		

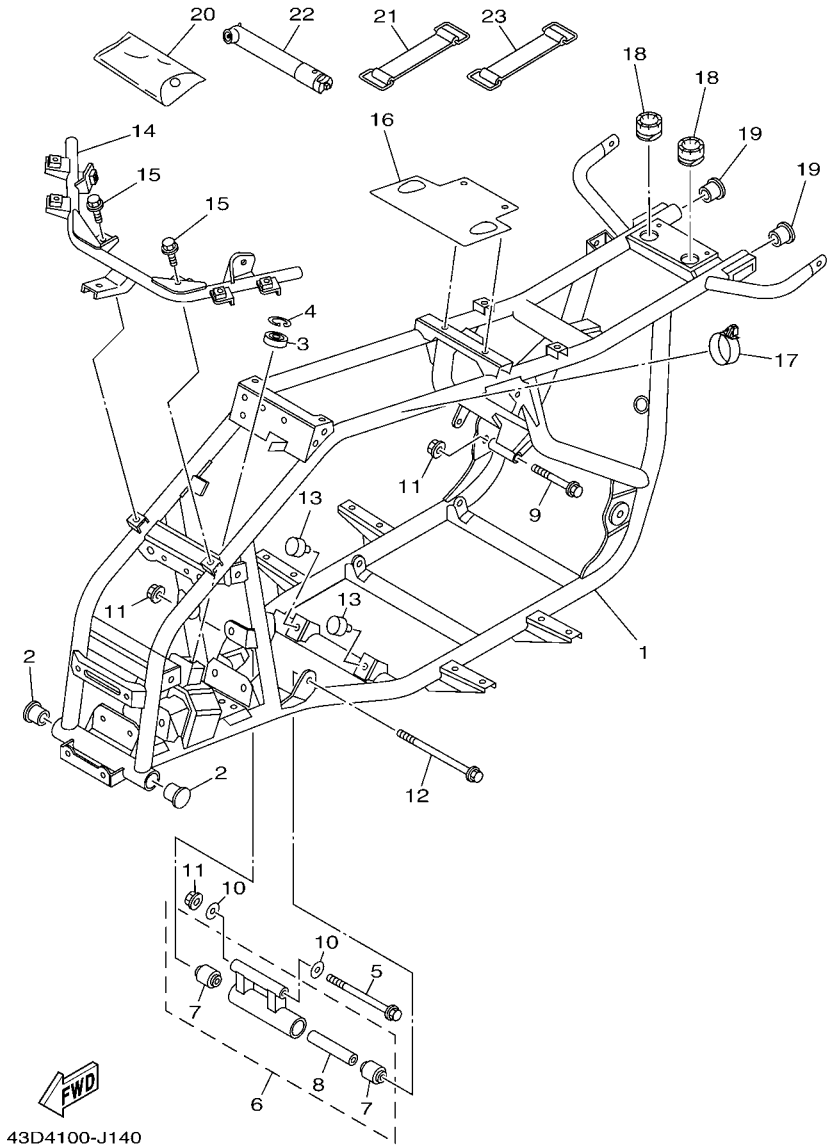

FIG. 14 FRAME

REF. NO.	PART NO.	DESCRIPTION	CAN	EUR	OCE	MEX		REMARKS
1	43D–F1110–01	FRAME COMP.	1	1	1	1		
2	43D–F1279–00	PLUG, BLIND	2	2	2	2		
3	43D–F11C1–00	BEARING	1	1	1	1		
4	43D–F11C2–00	CLIP	1	1	1	1		
5	43D–E2623–00	BOLT	1	1	1	1		
6	43D–F1410–00	ENGINE BRACKET COMP.	1	1	1	1		
7	43D–F11C3–00	.BUSH	2	2	2	2		
8	43D–F1459–00	.SPACER	1	1	1	1		
9	43D–F1632–00	BOLT 2	1	1	1	1		
10	43D–F1549–00	WASHER, FENDER MOLD	2	2	2	2		
11	43D–F1494–00	NUT	3	3	3	3		
12	43D–E3573–00	BOLT 1	1	1	1	1		
13	43D–F112C–00	DAMPER 2	2	2	2	2		
14	43D–F1513–00	STAY, FENDER 1	1	1	1	1		
15	95827–08012	BOLT, FLANGE	2	2	2	2		
16	43D–F1471–00	PROTECTOR, ENGINE	1	1	1	1		
17	43D–F1823–00	CLAMP, HOSE	1	1	1	1		
18	43D–F113B–00	DAMPER	2	2	2	2		
19	43D–F1289–00	PLUG, BLIND	2	2	2	2		
20	43D–F8100–00	TOOL KIT	1	1	1	1		
21	43D–F4399–00	BAND 2	1	1	1	1		
22	43D–F811A–01	GAUGE, AIR	1	1	1	1		
23	43D–F4398–00	BAND 1	1	1	1	1		

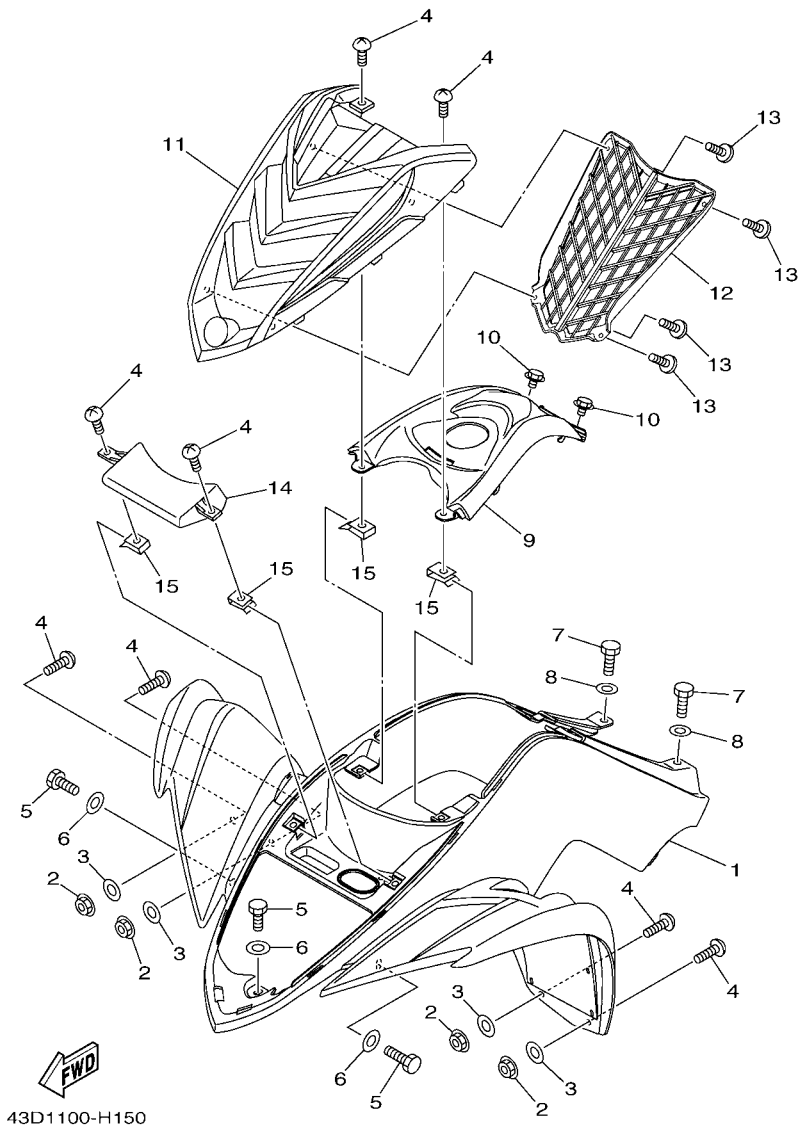

FIG. 15 FRONT FENDER

REF. NO.	PART NO.	DESCRIPTION	CAN	EUR	OCE	MEX		REMARKS
1	43D–F1500–00	FRONT FENDER ASSY	1					FOR DPBSE
	43D–F1500–B0	FRONT FENDER ASSY		1		1		UR FOR DPBSE
	43D–F1500–20	FRONT FENDER ASSY			1			UR FOR DPBSE
	43D–F1500–90	FRONT FENDER ASSY			1			UR FOR BWS1
	43D–F1500–C0	FRONT FENDER ASSY				1		UR FOR BWS1
2	43D–F1536–00	NUT 2	4	4	4	4		
3	43D–F2246–00	WASHER 4	4	4	4	4		
4	43D–F4444–00	SCREW	8	8	8	8		
5	97004–06016	BOLT	3	3	3	3		
6	92904–06600	WASHER	3	3	3	3		
7	97007–06020	BOLT	2	2	2	2		
8	92907–06600	WASHER, PLATE	2	2	2	2		
9	43D–F171A–00	COVER, TOP	1	1	1	1		
10	43D–F3119–00	PLUG, DRAIN	2	2	2	2		
11	43D–F1556–00	FENDER, FRONT 2	1	1	1	1		
12	43D–E2467–00	COVER, RADIATOR	1	1	1	1		
13	43D–F4453–00	SCREW	4	4	4	4		
14	43D–F4474–00	COVER	1	1	1	1		
15	43D–F3834–00	NUT 2	4	4	4	4		

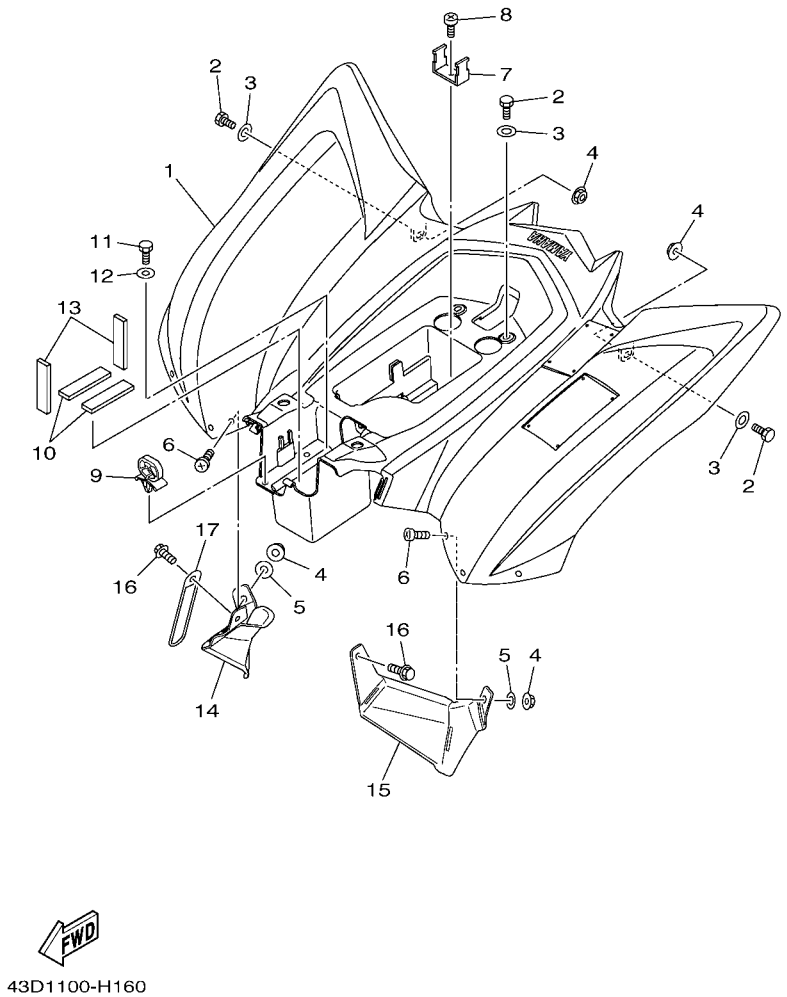

FIG. 16 REAR FENDER

REF. NO.	PART NO.	DESCRIPTION	CAN	EUR	OCE	MEX		REMARKS
1	43D–F1600–20	REAR FENDER ASSY.	1		1			UR FOR DPBSE
	43D–F1600–80	REAR FENDER ASSY.		1		1		UR FOR DPBSE
	43D–F1600–30	REAR FENDER ASSY.			1			UR FOR BWS1
	43D–F1600–90	REAR FENDER ASSY.				1		UR FOR BWS1
2	97007–06020	BOLT	4	4	4	4		
3	92907–06600	WASHER, PLATE	4	4	4	4		
4	43D–F1536–00	NUT 2	8	8	8	8		
5	43D–F2246–00	WASHER 4	6	6	6	6		
6	43D–F4444–00	SCREW	6	6	6	6		
7	43D–F164F–00	STAY 1	1	1	1	1		
8	43D–E4565–00	SCREW	1	1	1	1		
9	43D–F3447–00	CLIP	2	2	2	2		
10	43D–F1639–00	DAMPER 2	2	2	2	2		
11	97007–06020	BOLT	1	1	1	1		
12	92907–06600	WASHER, PLATE	1	1	1	1		
13	43D–F1649–00	DAMPER	2	2	2	2		
14	43D–F1721–00	COVER, SIDE 2	1	1	1	1		
15	43D–F1711–00	COVER, SIDE 1	1	1	1	1		
16	95827–06012	BOLT, FLANGE	2	2	2	2		
17	43D–E262K–00	CLAMP 1	1	1	1	1		

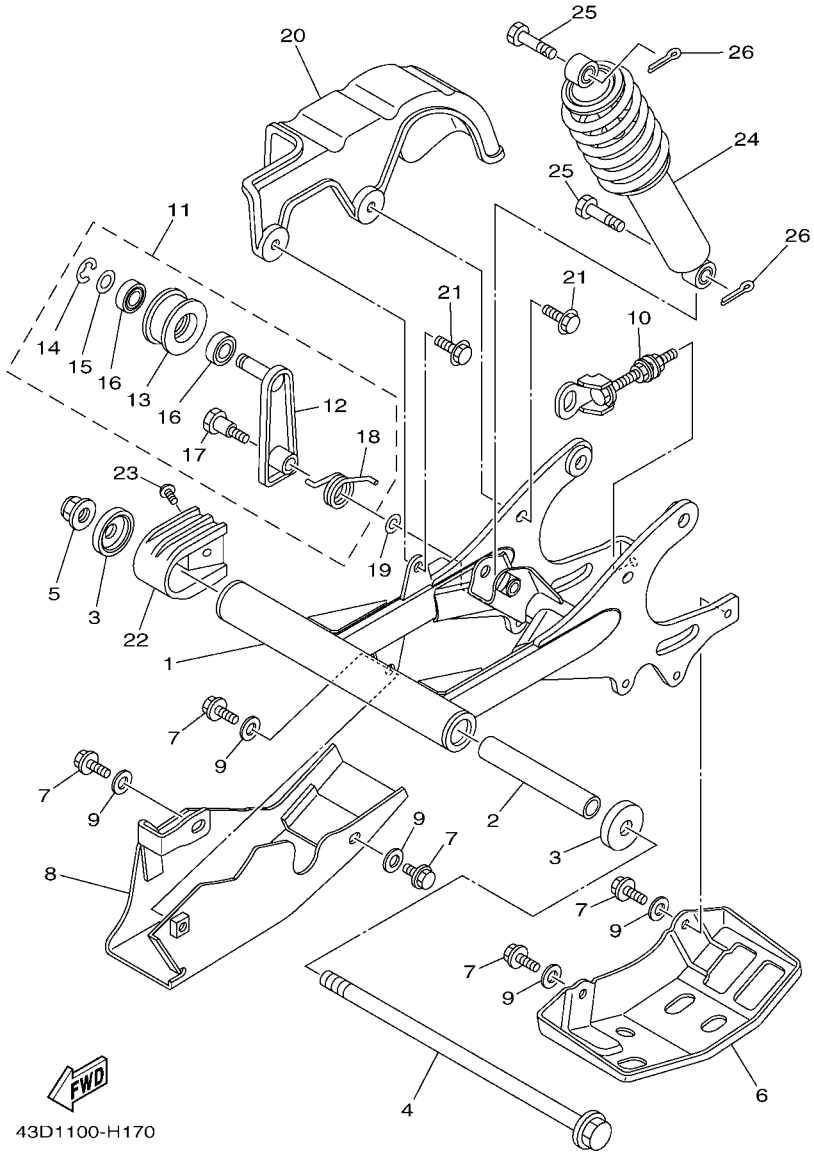

FIG. 17 REAR ARM

REF. NO.	PART NO.	DESCRIPTION	CAN	EUR	OCE	MEX		REMARKS
1	43D–F2100–00	REAR ARM ASSY	1	1	1	1		
2	43D–F2126–00	COLLAR, DISTANCE	1	1	1	1		
3	43D–F2128–00	COVER, THRUST 1	2	2	2	2		
4	43D–F1722–00	BOLT 2	1	1	1	1		
5	43D–F1535–00	NUT 1	1	1	1	1		
6	43D–F2361–00	GUARD 1	1	1	1	1		
7	43D–F2334–00	BOLT, CHAIH CASE 2	5	5	5	5		
8	43D–F2362–00	GUARD 2	1	1	1	1		
9	43D–E2289–00	WASHER	5	5	5	5		
10	43D–F5388–00	PULLER, CHAIN 1	1	1	1	1		
11	43D–F210L–00	CHAIN TENSIONER ASSY	1	1	1	1		
12	43D–F2183–00	.BRACKET, TENSIONER	1	1	1	1		
13	43D–F2178–00	.TENSIONER	1	1	1	1		
14	99002–10600	.CLIP	1	1	1	1		
15	43D–F3456–00	.WASHER	1	1	1	1		
16	43D–F2176–00	.BEARING	2	2	2	2		
17	43D–F4391–00	.BOLT, STUD	1	1	1	1		
18	43D–F2169–00	.SPRING, TENSIONER	1	1	1	1		
19	43D–F3427–00	WASHER	1	1	1	1		
20	43D–F2312–00	CASE, CHAIN 2	1	1	1	1		
21	95827–08016	BOLT, FLANGE	2	2	2	2		
22	43D–F2151–10	SEAL, GUARD	1	1	1	1		
23	43D–F3394–00	BOLT, SPECIAL	1	1	1	1		
24	43D–F2210–00	SHOCK ABSORBER ASSY, REAR	1	1	1	1		UR FOR DPBSE
	43D–F2210–10	SHOCK ABSORBER ASSY, REAR			1	1		UR FOR BWS1
25	97027–10040	BOLT, HEXAGON	2	2	2	2		
26	91401–25020	PIN, COTTER	2	2	2	2		

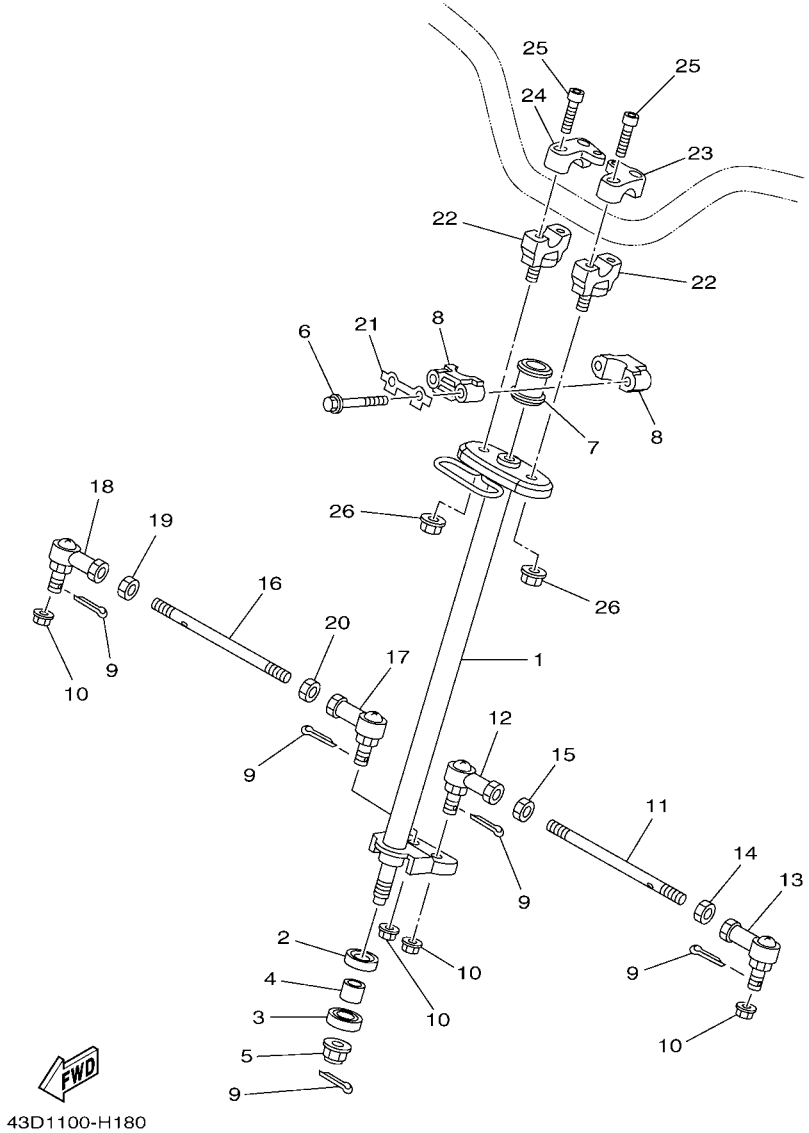

FIG. 18 STEERING

REF. NO.	PART NO.	DESCRIPTION	CAN	EUR	OCE	MEX		REMARKS
1	43D–F3813–01	COLUMN, STEERING 2	1	1	1	1		
2	43D–F3844–00	SEAL	1	1	1	1		
3	43D–F38B1–00	SEAL 2	1	1	1	1		
4	43D–F38B2–00	SPACER	1	1	1	1		
5	43D–F1535–00	NUT 1	1	1	1	1		
6	97022–08060	BOLT	2	2	2	2		
7	43D–F3812–00	BEARING, STEERING	1	1	1	1		
8	43D–F3872–00	HOLDER, BEARING	2	2	2	2		
9	91401–25020	PIN, COTTER	5	5	5	5		
10	43D–F1635–00	NUT, REAR FENDER	4	4	4	4		
11	43D–F3831–00	ROD, TIE	1	1	1	1		
12	43D–F3841–01	JOINT, UNIVERSAL 1	1	1	1	1		
13	43D–F3845–01	JOINT, UNIVERSAL 2	1	1	1	1		
14	43D–F1791–00	NUT	1	1	1	1		
15	43D–F1829–00	NUT	1	1	1	1		
16	43D–F3831–00	ROD, TIE	1	1	1	1		
17	43D–F3841–01	JOINT, UNIVERSAL 1	1	1	1	1		
18	43D–F3845–01	JOINT, UNIVERSAL 2	1	1	1	1		
19	43D–F1791–00	NUT	1	1	1	1		
20	43D–F1829–00	NUT	1	1	1	1		
21	43D–F3774–00	PLATE	1	1	1	1		
22	43D–F3442–00	HOLDER, HANDLE LOWER	2	2	2	2		
23	43D–F3441–00	HOLDER, HANDLE UPPER	1	1	1	1		
24	43D–F344A–00	HOLDER, HANDLE UPPER 1	1	1	1	1		
25	91314–06025	BOLT, HEXAGON SOCKET HEAD	4	4	4	4		
26	43D–F1635–00	NUT, REAR FENDER	2	2	2	2		

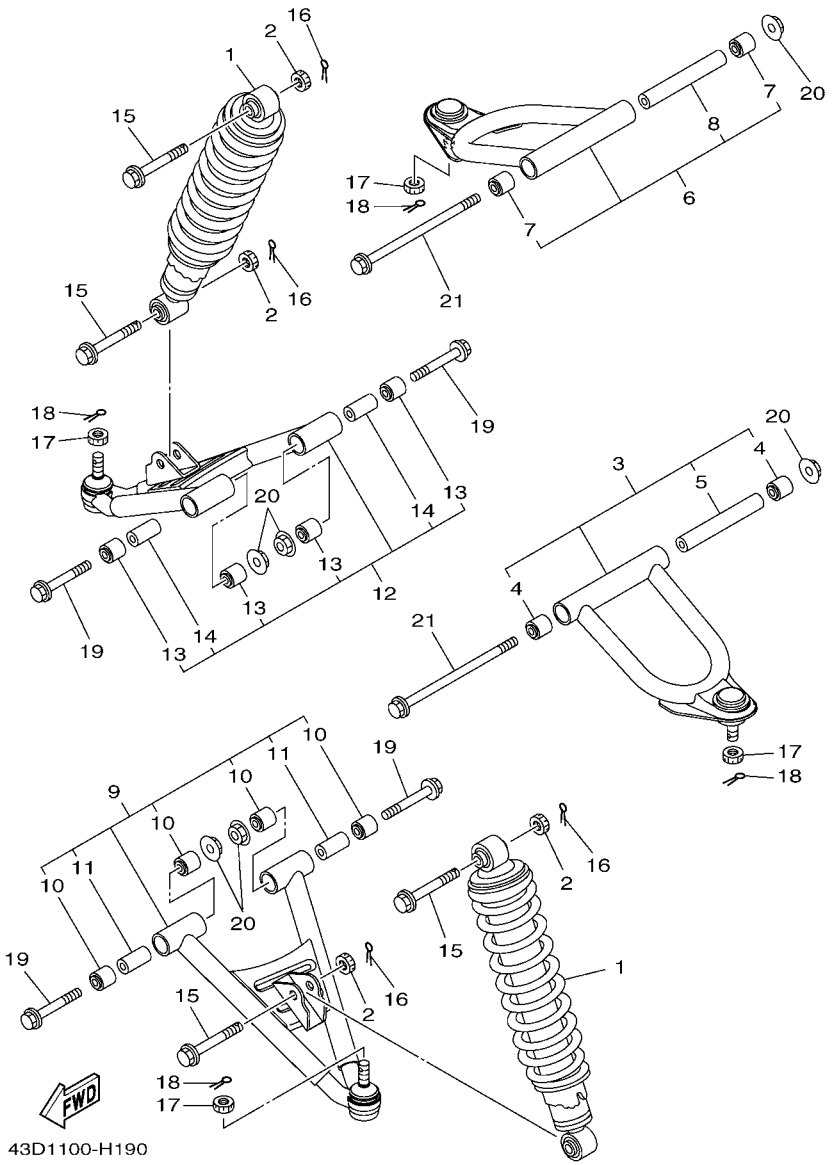

FIG. 19 FRONT SUSPENSION & WHEEL

REF. NO.	PART NO.	DESCRIPTION	CAN	EUR	OCE	MEX		REMARKS
1	43D–F3350–00	SHOCK ABSORBER ASSY	2	2	2	2		UR FOR DPBSE
	43D–F3350–10	SHOCK ABSORBER ASSY			2	2		UR FOR BWS1
2	43D–F1244–00	NUT	4	4	4	4		
3	43D–F3505–00	FRONT UPPER ARM SUB ASSY LH	1	1	1	1		
4	43D–F3526–00	.BUSH	2	2	2	2		
5	43D–F3363–00	.COLLAR 1	1	1	1	1		
6	43D–F3506–00	FRONT UPPER ARM SUB ASSY RH	1	1	1	1		
7	43D–F3526–00	.BUSH	2	2	2	2		
8	43D–F3363–00	.COLLAR 1	1	1	1	1		
9	43D–F3507–00	FRONT LOWER ARM SUB-ASSY (L.H)	1	1	1	1		
10	43D–F3526–00	.BUSH	4	4	4	4		
11	43D–F3364–00	.COLLAR 2	2	2	2	2		
12	43D–F3508–00	FRONT LOWER ARM SUB-ASSY (R.H)	1	1	1	1		
13	43D–F3526–00	.BUSH	4	4	4	4		
14	43D–F3364–00	.COLLAR 2	2	2	2	2		
15	97027–10040	BOLT, HEXAGON	4	4	4	4		
16	91401–25020	PIN, COTTER	4	4	4	4		
17	95302–10900	NUT, SLOTTED	4	4	4	4		
18	91401–25033	PIN, COTTER	4	4	4	4		
19	43D–F3471–00	BOLT	4	4	4	4		
20	43D–F1635–00	NUT, REAR FENDER	6	6	6	6		
21	43D–E2623–00	BOLT	2	2	2	2		

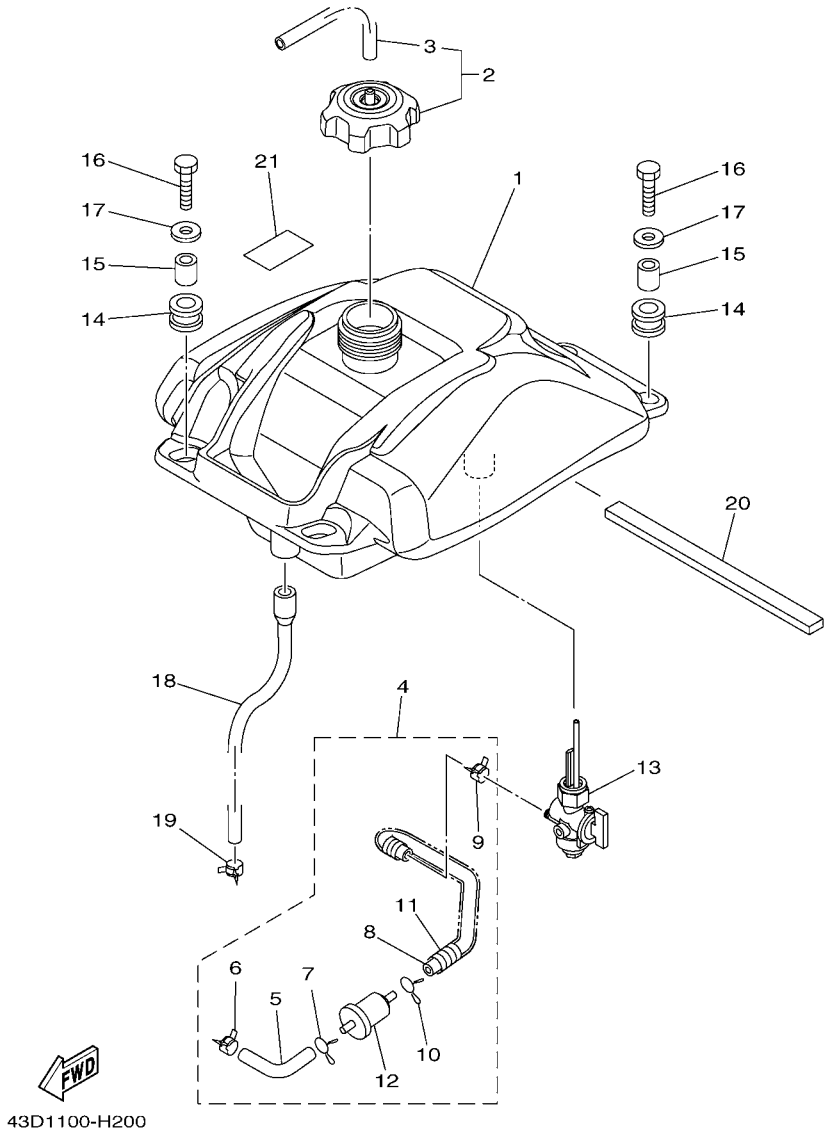

FIG. 20 FUEL TANK

REF. NO.	PART NO.	DESCRIPTION	CAN	EUR	OCE	MEX		REMARKS
1	43D–F4110–10	FUEL TANK COMP.	1					
	43D–F4110–00	FUEL TANK COMP.		1	1	1		
2	43D–F4670–01	TANK CAP SET	1	1	1	1		
3	43D–F41B4–01	.TUBE 1	1	1	1	1		
4	43D–F4560–10	FILTER ASSY	1					
	43D–F4560–00	FILTER ASSY		1	1	1		
5	43D–F41B5–10	.TUBE 2	1					
	43D–F41B5–00	.TUBE 2		1	1	1		
6	43D–F4366–00	.CLAMP, FUEL PIPE 1	1	1	1	1		
7	43D–F411M–00	.CLIP	1	1	1	1		
8	43D–F41B6–10	.TUBE 3	1					
	43D–F41B6–00	.TUBE 3		1	1	1		
9	43D–F4366–00	.CLAMP, FUEL PIPE 1	1	1	1	1		
10	43D–F411M–00	.CLIP	1	1	1	1		
11	43D–F432A–00	.PROTECTOR, PIPE 2	1	1	1	1		
12	43D–F4561–00	.BODY,FILTER	1	1	1	1		
13	43D–F4500–10	FUEL COCK ASSY 1	1	1	1	1		
14	43D–F4339–00	GROMMET	4	4	4	4		
15	43D–F412G–00	COLLAR	4	4	4	4		
16	97007–06030	BOLT	4	4	4	4		
17	92907–06600	WASHER, PLATE	4	4	4	4		
18	43D–F417E–00	TUBE, DRAIN	1	1	1	1		
19	90467–22097	CLIP	1	1	1	1		
20	43D–F4181–00	DAMPER, LOCATING 1	1	1	1	1		
21	43D–F1649–00	DAMPER	1	1	1	1		

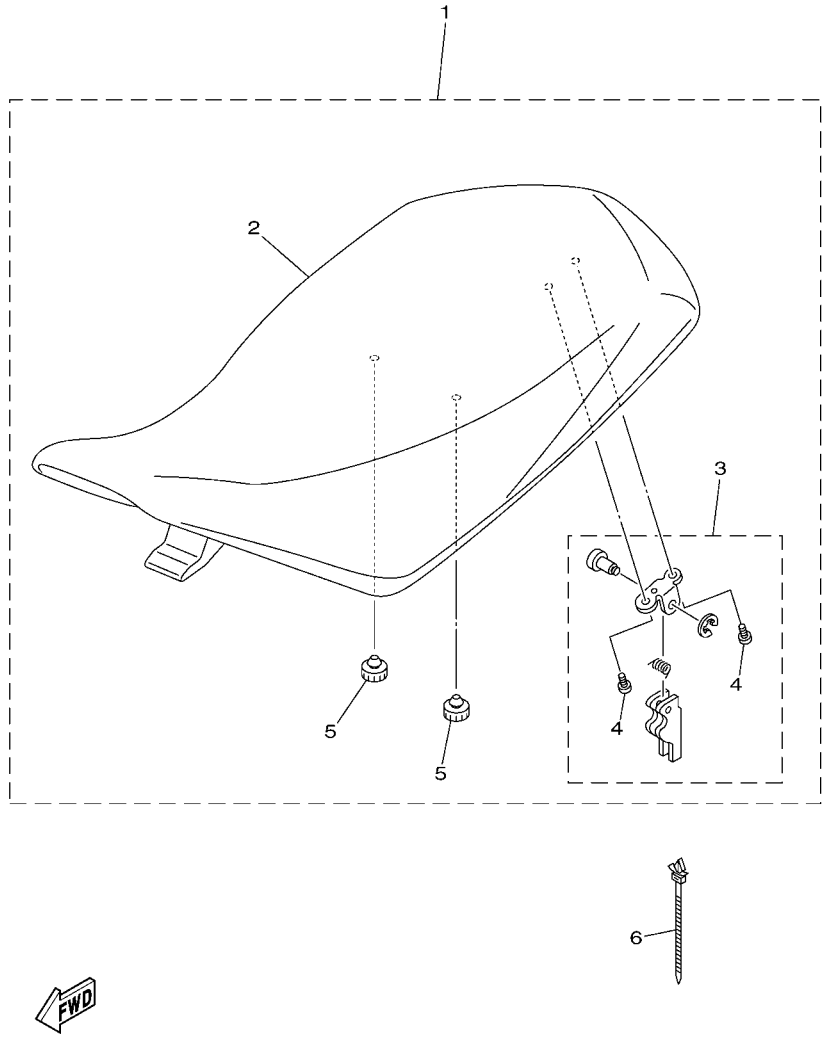

FIG. 21 SEAT

REF. NO.	PART NO.	DESCRIPTION	CAN	EUR	OCE	MEX		REMARKS
1	43D–F4710–00	SINGLE SEAT ASSY	1	1	1	1		
2	43D–F4771–00	.SEMI-DOUBLE SEAT	1	1	1	1		
3	43D–F4760–00	.SEAT LEVER ASSY	1	1	1	1		
4	43D–F11C5–00	..SCREW 1	2	2	2	2		
5	43D–F7114–00	.STOPPER, MAIN STAND	2	2	2	2		
6	43D–F15A3–00	CLAMP	1	1	1	1		

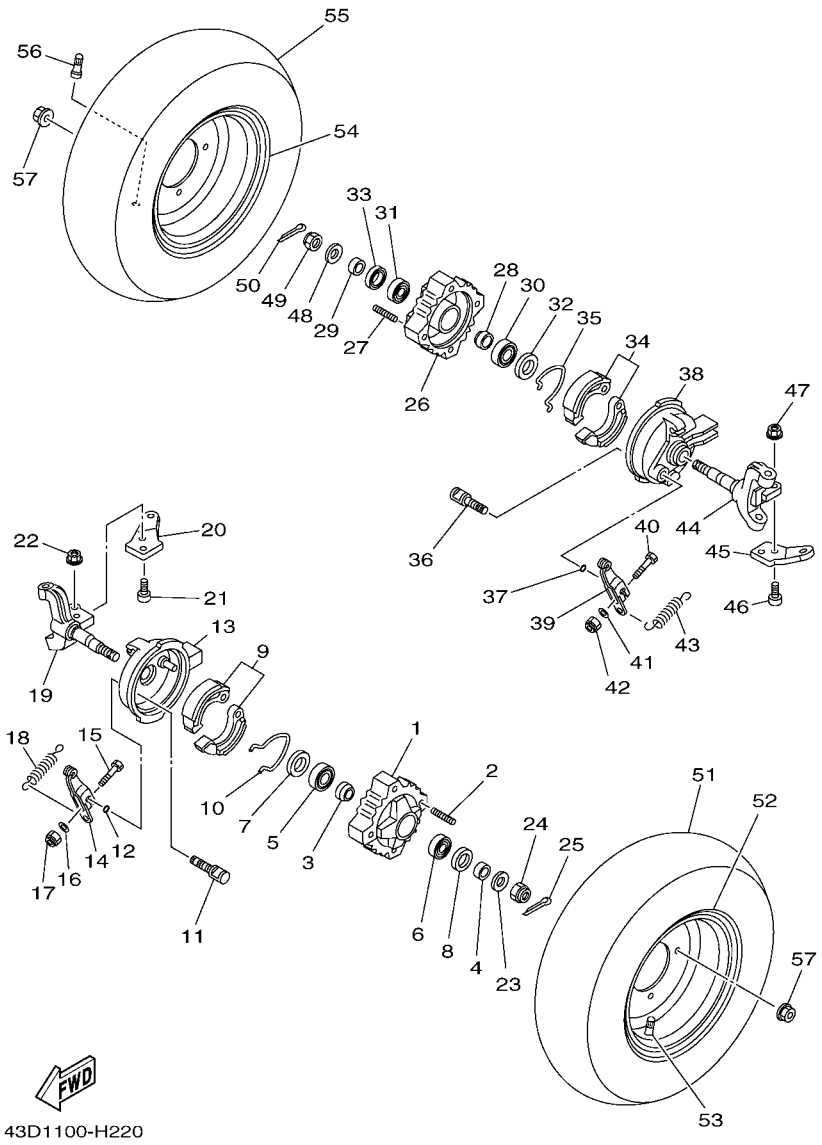

FIG. 22 FRONT WHEEL

REF. NO.	PART NO.	DESCRIPTION	CAN	EUR	OCE	MEX		REMARKS
1	43D–F5111–00	HUB, FRONT	1	1	1	1		
2	43D–F4441–00	BOLT, STUD	4	4	4	4		
3	43D–F5117–00	SPACER, BEARING	1	1	1	1		
4	43D–F5105–00	SPACER	1	1	1	1		
5	43D–F51H1–00	BEARING	1	1	1	1		
6	43D–F51H2–00	BEARING 2	1	1	1	1		
7	43D–F511B–00	SEAL, OIL	1	1	1	1		
8	43D–F51H3–00	OIL SEAL 2	1	1	1	1		
9	43D–F510L–00	BRAKE SHOE COMP.	1	1	1	1		
10	43D–F5133–00	SPRING, RETURN	1	1	1	1		
11	43D–F5351–00	CAMSHAFT	1	1	1	1		
12	43D–F51H4–00	O-RING	1	1	1	1		
13	43D–F5121–00	PLATE, BRAKE SHOE	1	1	1	1		
14	43D–F5155–00	LEVER, CAMSHAFT 1	1	1	1	1		
15	97022–06030	BOLT	1	1	1	1		
16	43D–F2149–00	WASHER	1	1	1	1		
17	43D–F2251–00	NUT 1	1	1	1	1		
18	43D–F5143–00	SPRING, RETURN	1	1	1	1		
19	43D–F3511–00	KNUCKLE, STEERING 1	1	1	1	1		
20	43D–F3512–01	ARM, KNUCKLE 1	1	1	1	1		
21	43D–F2241–00	BOLT 1	2	2	2	2		
22	43D–F2143–00	NUT	2	2	2	2		
23	43D–F2245–00	WASHER 3	1	1	1	1		
24	43D–F1293–00	NUT	1	1	1	1		
25	43D–F112N–00	PIN	1	1	1	1		
26	43D–F5111–00	HUB, FRONT	1	1	1	1		
27	43D–F4441–00	BOLT, STUD	4	4	4	4		

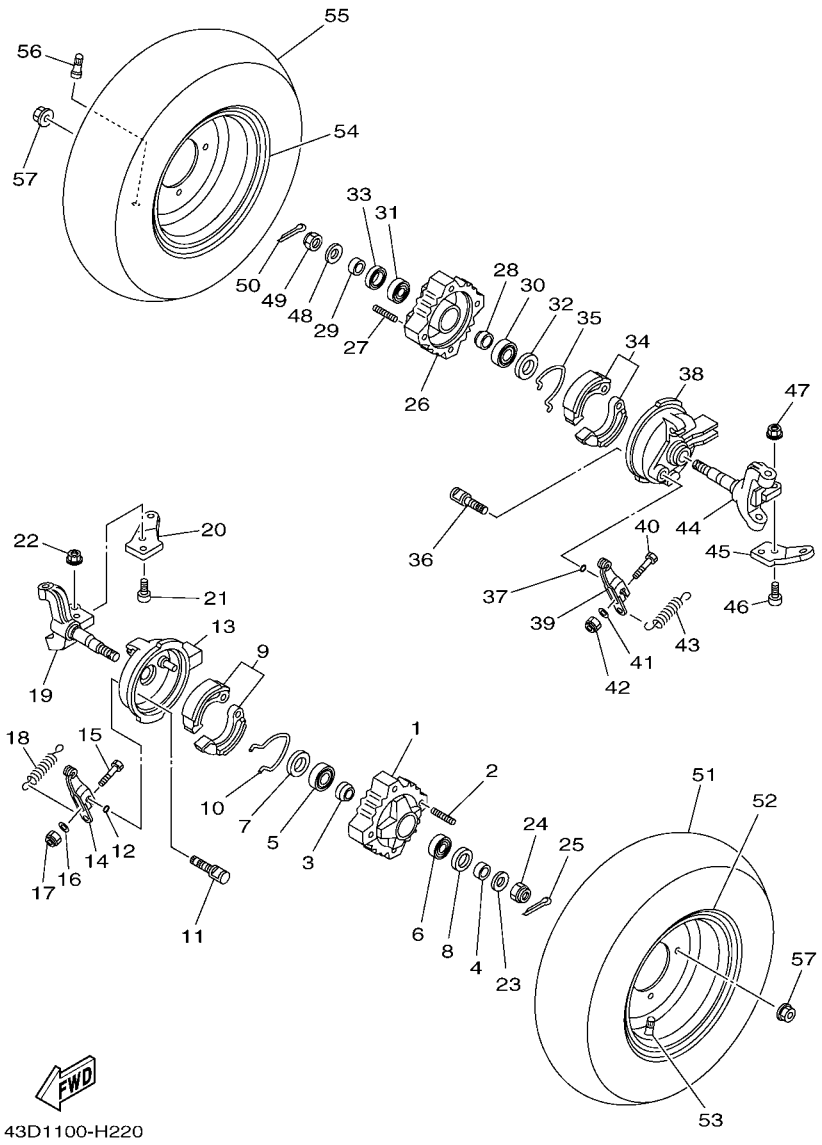

FIG. 22 FRONT WHEEL

REF. NO.	PART NO.	DESCRIPTION	CAN	EUR	OCE	MEX		REMARKS
28	43D–F5117–00	SPACER, BEARING	1	1	1	1		
29	43D–F5105–00	SPACER	1	1	1	1		
30	43D–F51H1–00	BEARING	1	1	1	1		
31	43D–F51H2–00	BEARING 2	1	1	1	1		
32	43D–511B–00	SEAL, OIL	1	1	1	1		
33	43D–F51H3–00	OIL SEAL 2	1	1	1	1		
34	43D–F510L–00	BRAKE SHOE COMP.	1	1	1	1		
35	43D–F5133–00	SPRING, RETURN	1	1	1	1		
36	43D–F5351–00	CAMSHAFT	1	1	1	1		
37	43D–F51H4–00	O-RING	1	1	1	1		
38	43D–F5169–00	PLATE, BRAKE SHOE 2	1	1	1	1		
39	43D–F5156–00	LEVER, CAMSHAFT 2	1	1	1	1		
40	97022–06030	BOLT	1	1	1	1		
41	43D–F2149–00	WASHER	1	1	1	1		
42	43D–F2251–00	NUT 1	1	1	1	1		
43	43D–F5143–00	SPRING, RETURN	1	1	1	1		
44	43D–F3521–00	KNUCKLE, STEERING 2	1	1	1	1		
45	43D–F3522–01	ARM, KNUCKLE 2	1	1	1	1		
46	43D–F2241–00	BOLT 1	2	2	2	2		
47	43D–F2143–00	NUT	2	2	2	2		
48	43D–F2245–00	WASHER 3	1	1	1	1		
49	43D–F1293–00	NUT	1	1	1	1		
50	43D–F112N–00	PIN	1	1	1	1		
51	43D–F510S–00	TIRE (AT18 X 7-8 M939)	1	1	1	1		
52	43D–F5180–00	WHEEL COMP.	1	1	1	1		
53	43D–F5170–00	AIR VALVE ASSY	1	1	1	1		
54	43D–F5180–00	WHEEL COMP.	1	1	1	1		

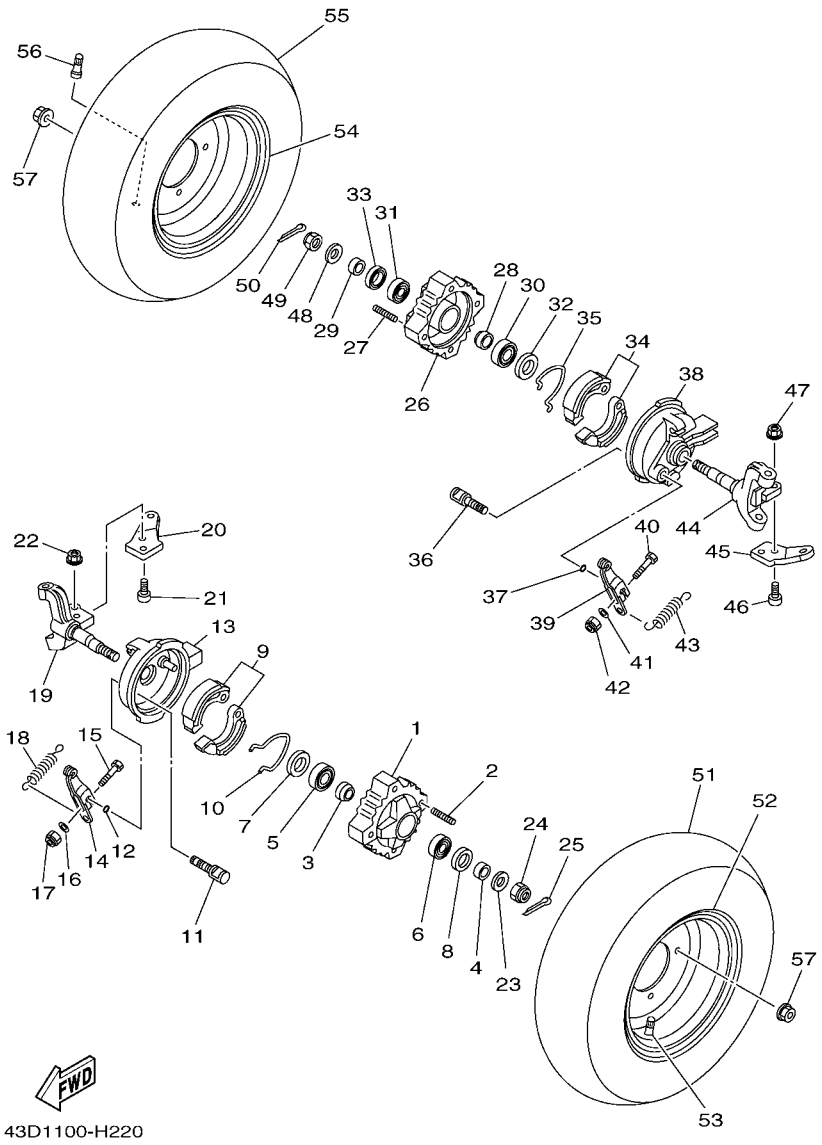

FIG. 22 FRONT WHEEL

REF. NO.	PART NO.	DESCRIPTION	CAN	EUR	OCE	MEX		REMARKS
55	43D–F510S–00	TIRE (AT18 X 7-8 M939)	1	1	1	1		
56	43D–F5170–00	AIR VALVE ASSY	1	1	1	1		
57	43D–F1839–00	NUT	8	8	8	8		

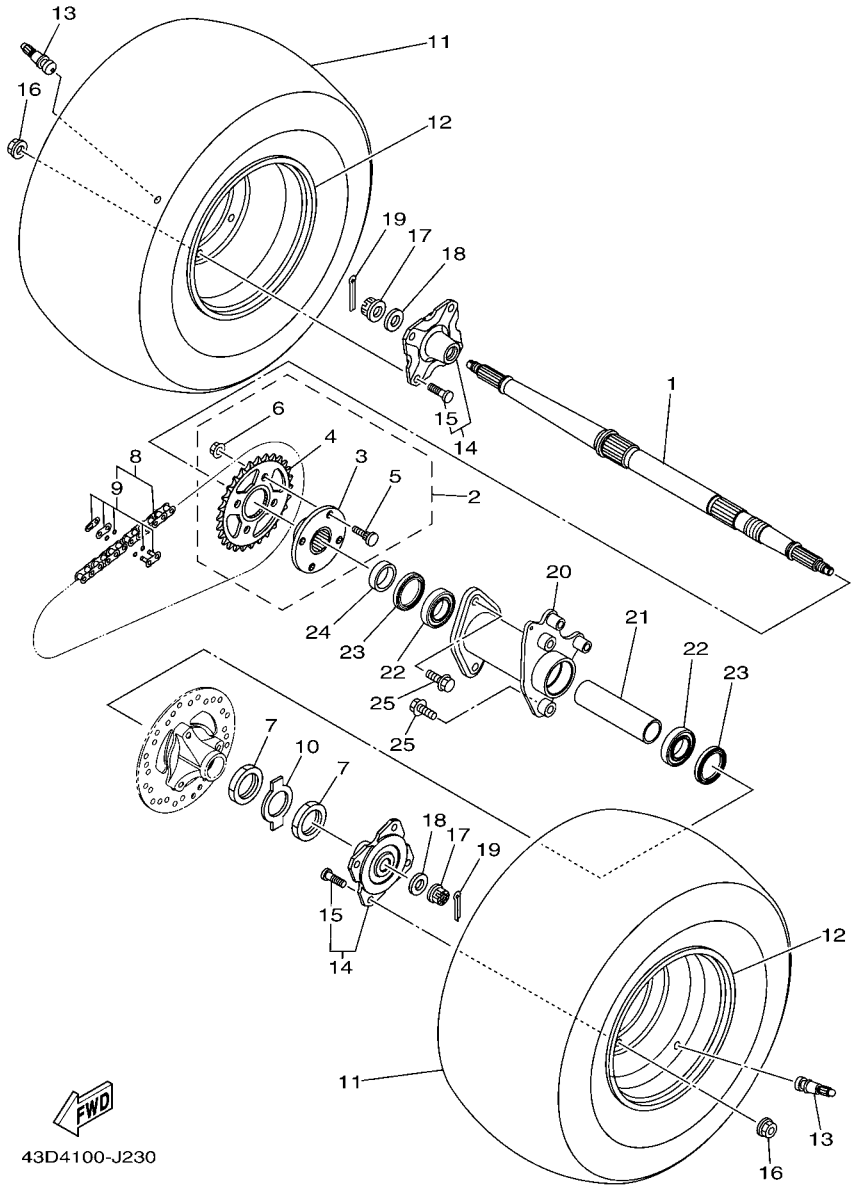

FIG. 23 REAR WHEEL

REF. NO.	PART NO.	DESCRIPTION	CAN	EUR	OCE	MEX		REMARKS
1	43D–F5381–00	AXLE, WHEEL	1	1	1	1		
2	43D–F5420–00	SPROCKET, DRIVEN (20T)	1	1	1	1		
3	43D–F5386–00	.COLLAR, SPROCKET AXLE	1	1	1	1		
4	43D–F5438–00	.SPROCKET, DRIVEN (38T)	1	1	1	1		
5	43D–F3459–00	.BOLT	4	4	4	4		
6	43D–F1635–00	.NUT, REAR FENDER	4	4	4	4		
7	43D–F1636–00	NUT	2	2	2	2		
8	43D–F53C0–00	CHAIN	1	1	1	1		
9	43D–F53N3–00	.MASTER LINK	1	1	1	1		
10	43D–F5412–00	WASHER	1	1	1	1		
11	43D–F53P3–00	TIRE (AT18 X 9-8 M940)	2	2	2	2		
12	43D–F5390–00	REAR WHEEL COMP.	2	2	2	2		
13	43D–F5170–00	AIR VALVE ASSY	2	2	2	2		
14	43D–F5383–00	COLLAR, WHEEL	2	2	2	2		
15	43D–F1738–00	.BOLT	4	4	4	4		
16	43D–F1839–00	NUT	8	8	8	8		
17	43D–F5382–00	NUT, AXLE	2	2	2	2		
18	43D–F2243–00	WASHER 1	2	2	2	2		
19	91401–25033	PIN, COTTER	2	2	2	2		
20	43D–F5311–01	HUB, REAR	1	1	1	1		
21	43D–F5317–00	SPACER, BEARING	1	1	1	1		
22	43D–F53N4–00	BEARING	2	2	2	2		
23	43D–F537Y–00	SEAL, DUST	2	2	2	2		
24	43D–F5683–00	SPACER	1	1	1	1		
25	43D–F3492–00	BOLT	4	4	4	4		

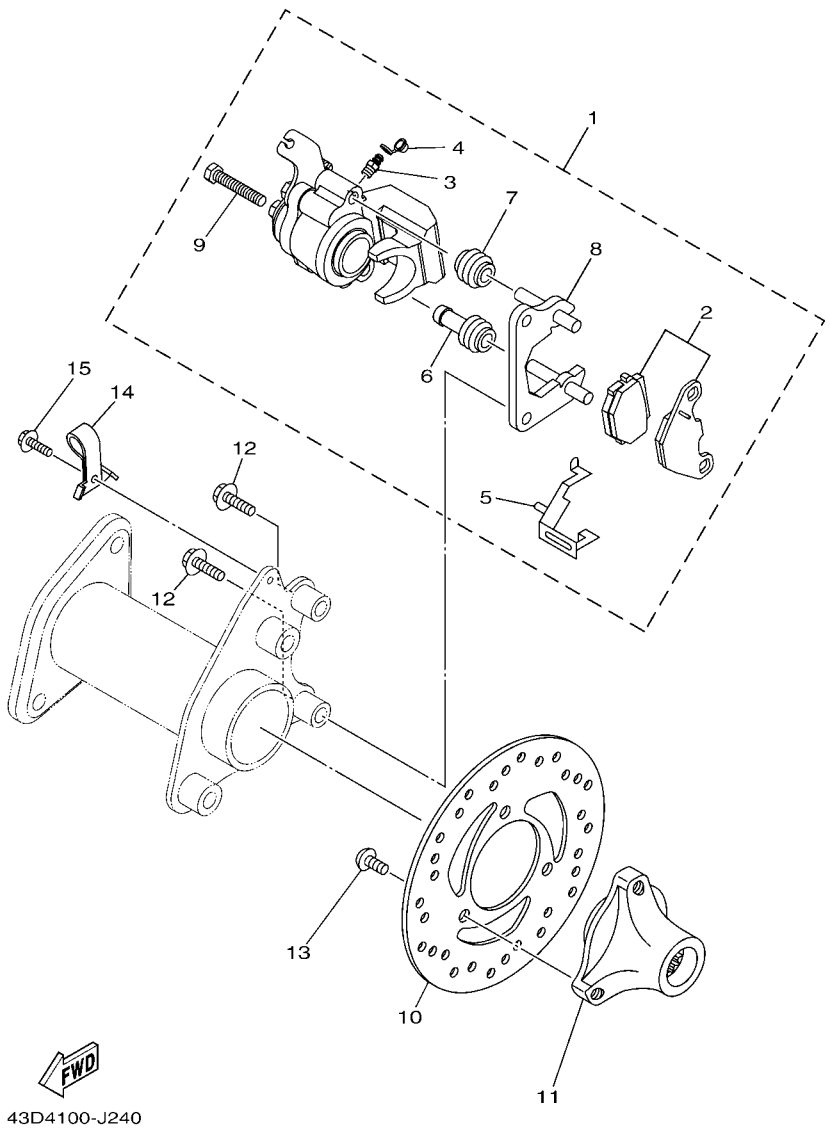

FIG. 24 REAR BRAKE CALIPER

REF. NO.	PART NO.	DESCRIPTION	CAN	EUR	OCE	MEX		REMARKS
1	43D–F580V–01	CALIPER ASSY, REAR 1	1	1	1	1		
2	43D–F5906–01	.REAR PAD LINING COMP. SET	1	1	1	1		
3	43D–F5824–00	.SCREW, BLEED	1	1	1	1		
4	43D–F5825–00	.CAP	1	1	1	1		
5	43D–F5919–00	.SUPPORT, PAD	1	1	1	1		
6	43D–F5937–00	.BOOT 2	1	1	1	1		
7	43D–F5917–00	.BOOT, CALIPER	1	1	1	1		
8	43D–F5921–01	.BRACKET, SUPPORT	1	1	1	1		
9	43D–F5972–00	.ADJUST BOLT	1	1	1	1		
10	43D–F582V–01	DISC, REAR BRAKE 1	1	1	1	1		
11	43D–F5712–00	BRACKET, DISC	1	1	1	1		
12	43D–F5833–00	BOLT, FITTING	2	2	2	2		
13	43D–F1631–00	BOLT 1	3	3	3	3		
14	43D–F5876–00	HOLDER, BRAKE HOSE 2	1	1	1	1		
15	95827–06012	BOLT, FLANGE	1	1	1	1		

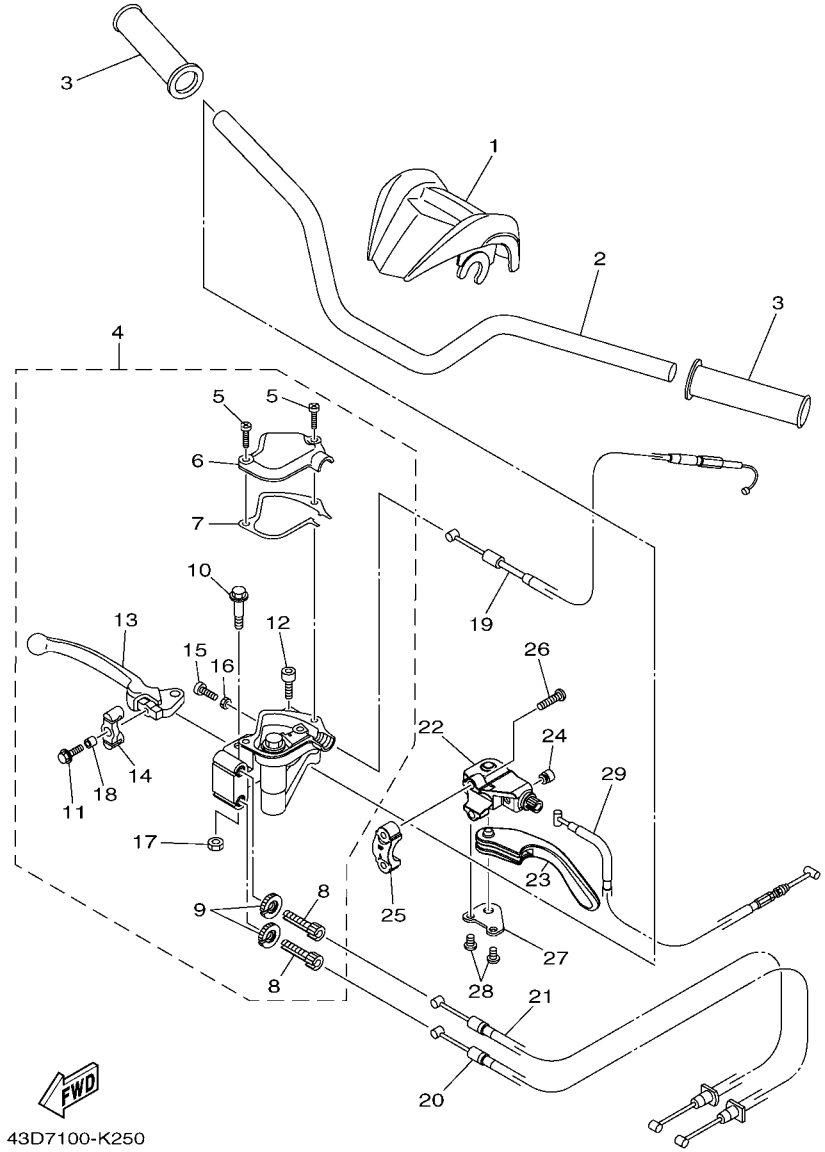

FIG. 25 STEERING HANDLE & CABLE

REF. NO.	PART NO.	DESCRIPTION	CAN	EUR	OCE	MEX		REMARKS
1	43D–F6124–00	PROTECTOR, HANDLEBAR	1	1	1	1		
2	43D–F6111–01	HANDLEBAR	1	1	1	1		
3	43D–F6241–00	GRIP	2	2	2	2		
4	43D–F6250–01	THROTTLE LEVER ASSY	1	1	1	1		
5	43D–H1145–00	.SCREW 1	2	2	2	2		
6	43D–F628F–00	.CAP, GEAR	1	1	1	1		
7	43D–F628G–00	.GASKET	1	1	1	1		
8	43D–F1739–00	.BOLT	2	2	2	2		
9	43D–F1968–00	.NUT	2	2	2	2		
10	43D–F3346–00	.BOLT 1	1	1	1	1		
11	43D–F6382–00	.BOLT, AJUSTING	1	1	1	1		
12	43D–F6332–00	.BOLT	1	1	1	1		
13	43D–H3922–01	.LEVER 2	1	1	1	1		
14	43D–F6347–00	.JOINT, CABLE	1	1	1	1		
15	43D–F6337–00	.BOLT, ADJUSTING	1	1	1	1		
16	43D–F3357–00	.NUT	1	1	1	1		
17	43D–F3778–00	.NUT	1	1	1	1		
18	43D–F7213–00	.COLLAR	1	1	1	1		
19	43D–F6311–01	CABLE, THROTTLE 1	1	1	1	1		
20	43D–F6340–00	CABLE, BRAKE	1	1	1	1		
21	43D–F6350–00	CABLE, BRAKE	1	1	1	1		
22	43D–F5727–00	BRACKET, LEVER	1	1	1	1		
23	43D–F5726–00	LEVER, BRAKE	1	1	1	1		
24	43D–F6113–00	DAMPER	1	1	1	1		
25	43D–F6393–00	HOLDER	1	1	1	1		
26	43D–F8354–00	SCREW	2	2	2	2		
27	43D–F5689–00	PLATE, GUIDE	1	1	1	1		

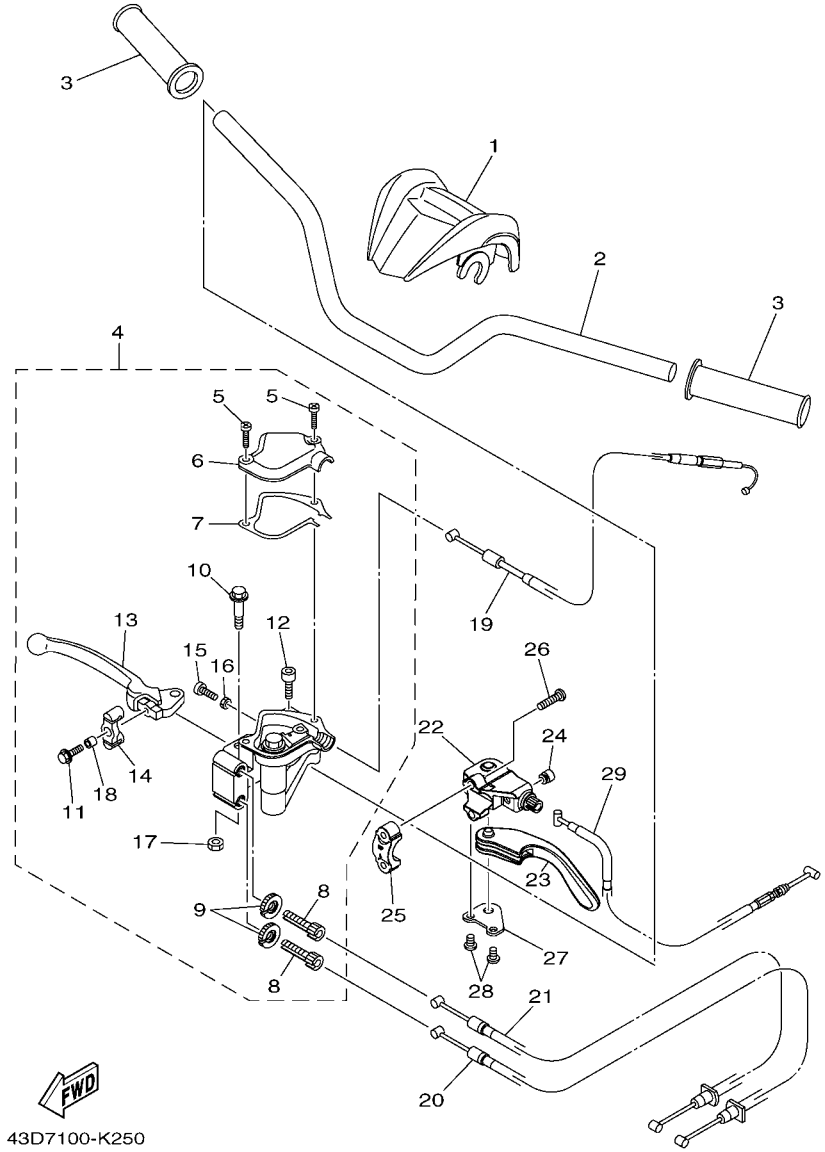

FIG. 25 STEERING HANDLE & CABLE

REF. NO.	PART NO.	DESCRIPTION	CAN	EUR	OCE	MEX		REMARKS
28	43D–F8355–00	SCREW	2	2	2	2		
29	43D–F6341–10	WIRE, BRAKE 1	1	1	1	1		

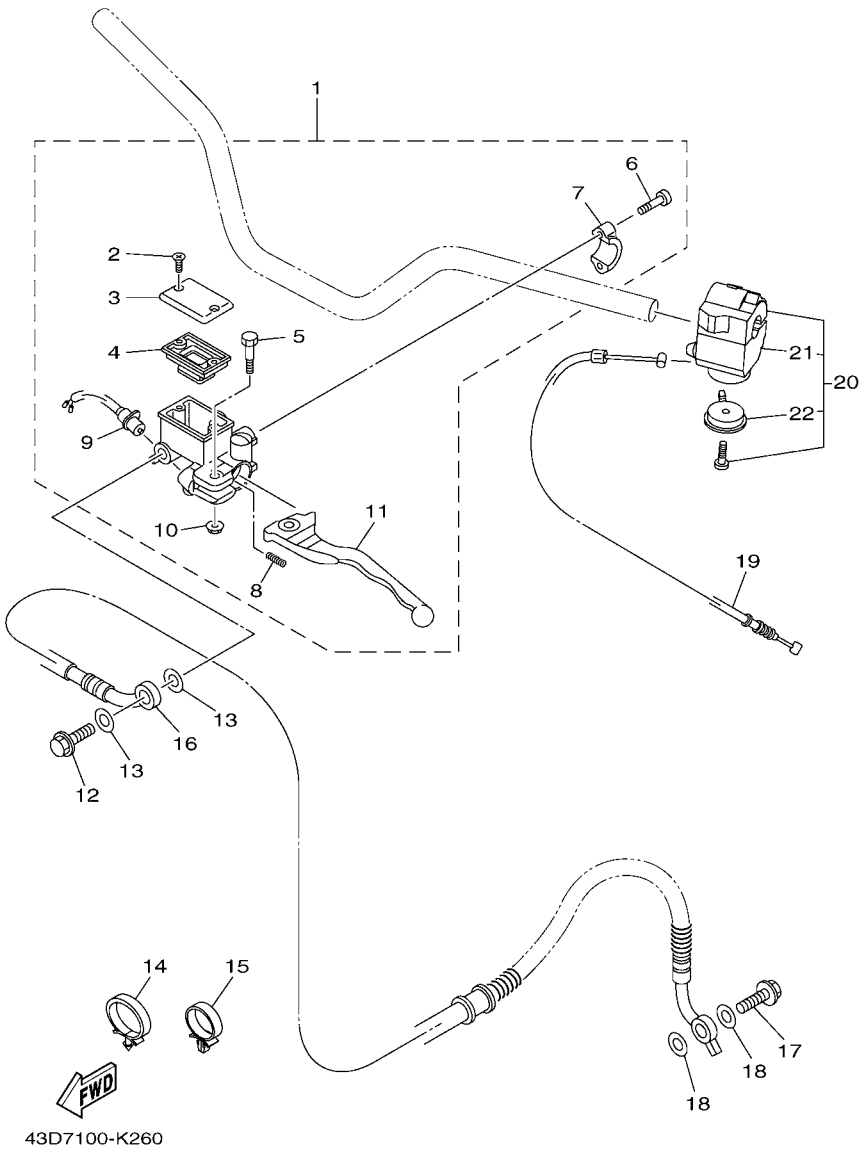

FIG. 26 REAR MASTER CYLINDER

REF. NO.	PART NO.	DESCRIPTION	CAN	EUR	OCE	MEX		REMARKS
1	43D–F583V–00	RR. MASTER CYLINDER ASSY.	1	1	1	1		
2	43D–F11C8–00	.SCREW 4	2	2	2	2		
3	43D–F5852–00	.CAP, RESERVOIR	1	1	1	1		
4	43D–F5854–00	.DIAPHRAGM, RESERVOIR	1	1	1	1		
5	43D–F2277–00	.BOLT	1	1	1	1		
6	43D–F11C9–00	.SCREW 5	2	2	2	2		
7	43D–F5867–00	.BRACKET, MASTER CYLINDER	1	1	1	1		
8	43D–F6314–00	.SPRING	1	1	1	1		
9	43D–H2550–00	.STOP SWITCH ASSY	1	1	1	1		
10	43D–F3833–00	.NUT 1	1	1	1	1		
11	43D–H3912–00	.LEVER 1	1	1	1	1		
12	43D–F244H–00	BOLT	1	1	1	1		
13	43D–F2244–00	WASHER 2	2	2	2	2		
14	43D–F53N5–00	CLAMP 1	1	1	1	1		
15	43D–F1823–00	CLAMP, HOSE	1	1	1	1		
16	43D–F5874–01	HOSE, BRAKE	1	1	1	1		
17	43D–F244H–00	BOLT	1	1	1	1		
18	43D–F2244–00	WASHER 2	2	2	2	2		
19	43D–F6331–00	CABLE, STARTER 1	1	1	1	1		
20	43D–H3975–00	SWITCH, HANDLE 2	1	1	1	1		
21	43D–H259E–00	.SWITCH ASSY	1	1	1	1		
22	43D–H3941–00	.LEVER, STARTER	1	1	1	1		

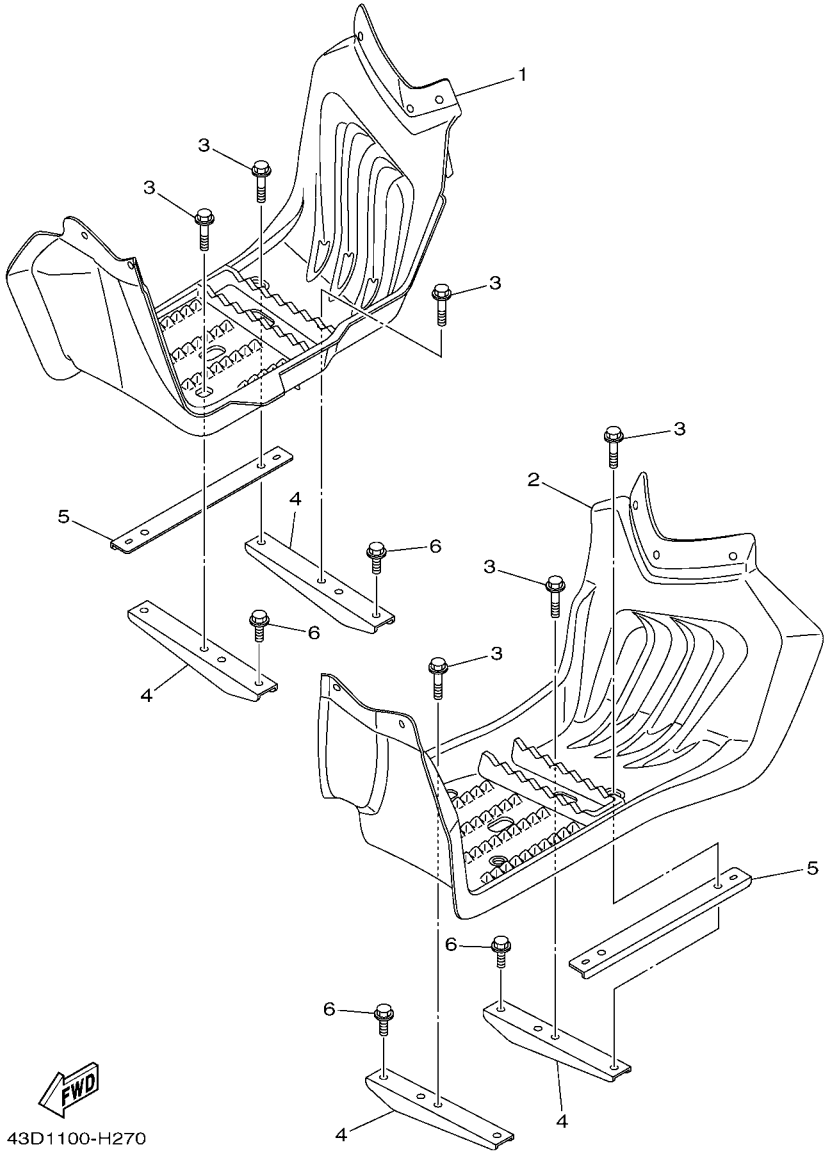

FIG. 27 STAND & FOOTREST

REF. NO.	PART NO.	DESCRIPTION	CAN	EUR	OCE	MEX		REMARKS
1	43D–F7463–00	COVER 2	1	1	1	1		
2	43D–F7453–00	COVER 1	1	1	1	1		
3	43D–F3356–00	BOLT 2	8	8	8	8		
4	43D–F7471–00	BAR, FOOTREST 1	4	4	4	4		
5	43D–F7445–00	PLATE 1	2	2	2	2		
6	43D–F2125–10	BOLT	4	4	4	4		

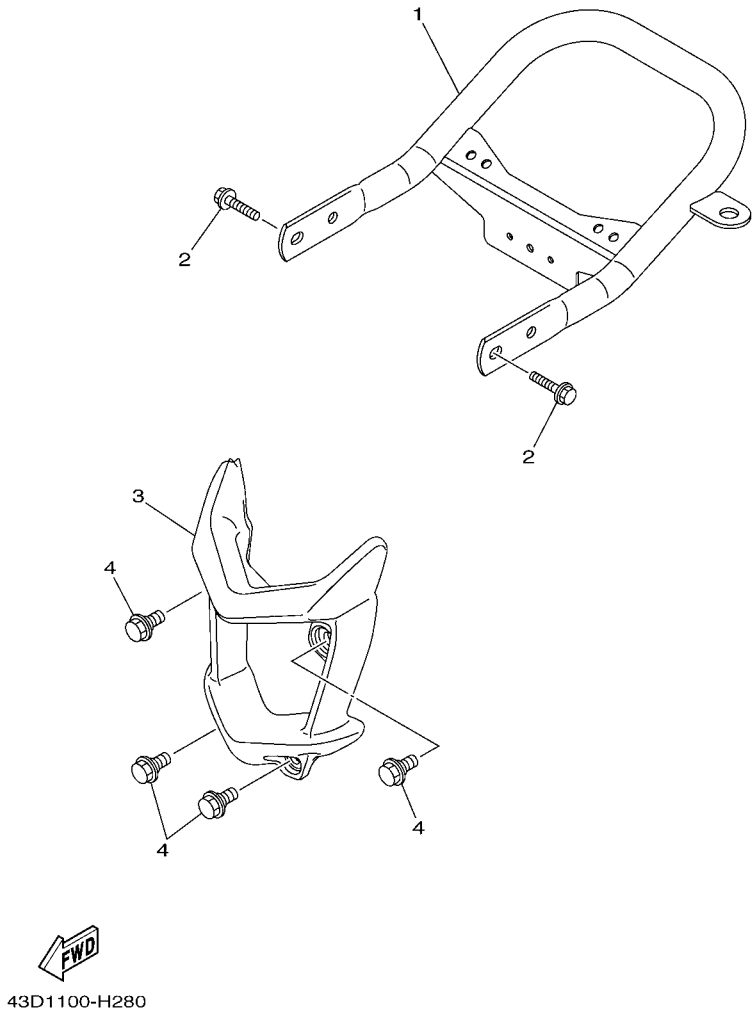

FIG. 28 GUARD

REF. NO.	PART NO.	DESCRIPTION	CAN	EUR	OCE	MEX		REMARKS
1	43D–F845R–00	BAR, CARRY REAR	1	1	1	1		
2	95827–08012	BOLT, FLANGE	4	4	4	4		
3	43D–F845N–00	BAR, CARRY FRONT	1	1	1	1		
4	43D–F3436–00	BOLT	4	4	4	4		

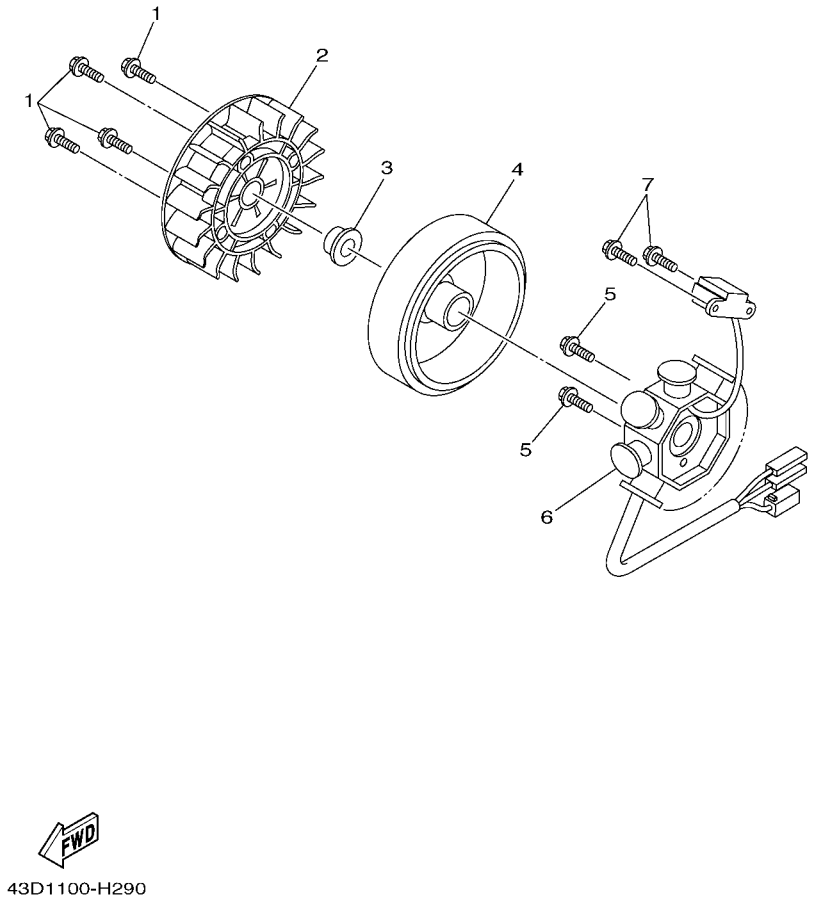

FIG. 29 GENERATOR

REF. NO.	PART NO.	DESCRIPTION	CAN	EUR	OCE	MEX		REMARKS
1	95022–06016	BOLT, FLANGE	4	4	4	4		
2	43D–E2611–00	FAN	1	1	1	1		
3	43D–E3588–00	NUT	1	1	1	1		
4	43D–H5550–00	ROTOR ASSY	1	1	1	1		
5	95022–06020	BOLT, FLANGE	2	2	2	2		
6	43D–H5510–00	STATOR ASSY	1	1	1	1		
7	43D–F1532–00	BOLT 2	2	2	2	2		

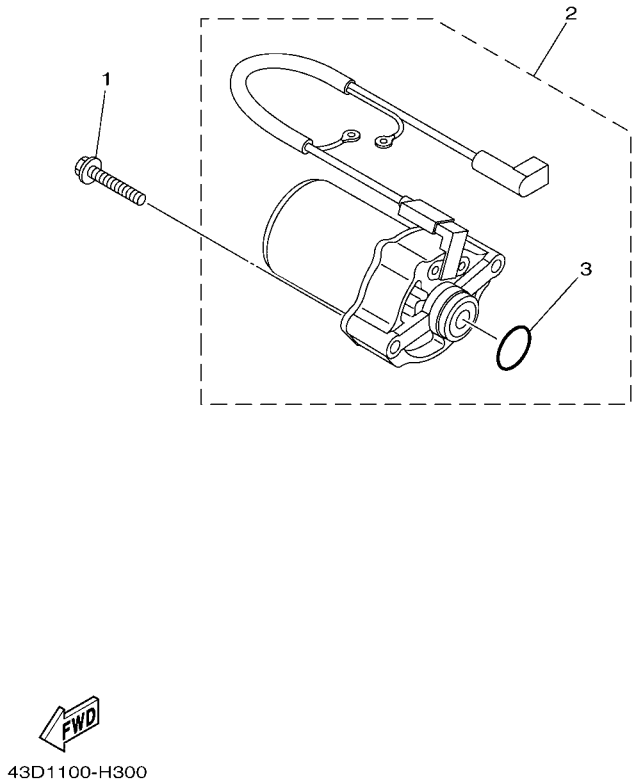

FIG. 30 STARTING MOTOR

REF. NO.	PART NO.	DESCRIPTION	CAN	EUR	OCE	MEX		REMARKS
1	95022–06040	BOLT, FLANGE	2	2	2	2		
2	43D–H1800–00	STARTING MOTOR ASSY	1	1	1	1		
3	43D–H182M–00	.O-RING	1	1	1	1		

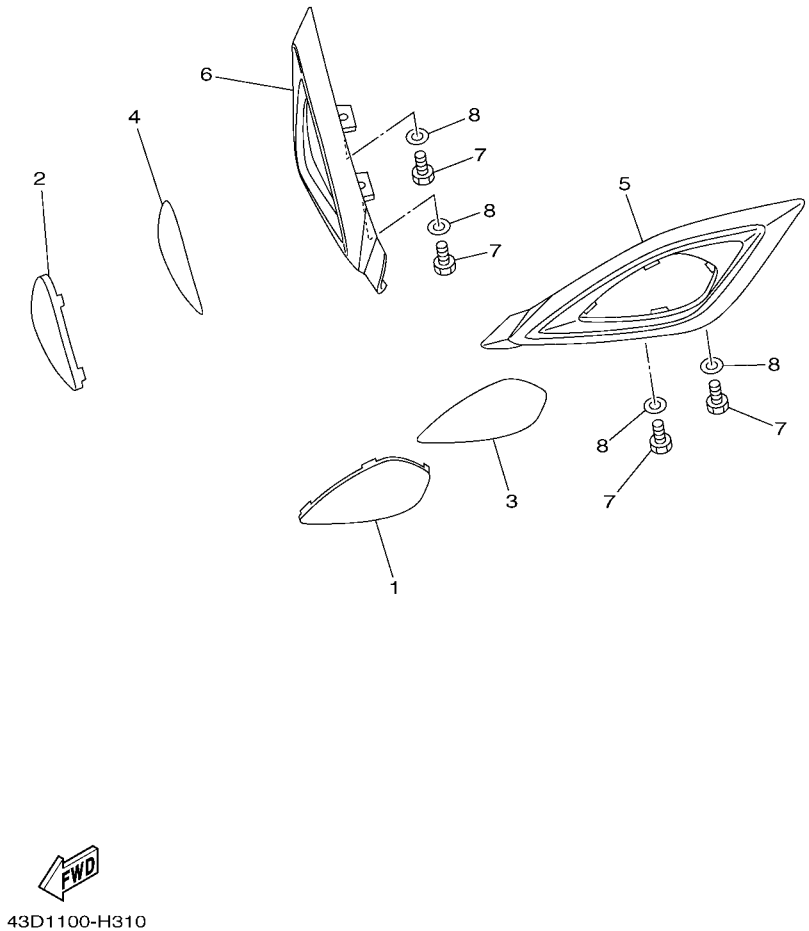

FIG. 31 HEADLIGHT

REF. NO.	PART NO.	DESCRIPTION	CAN	EUR	OCE	MEX		REMARKS
1	43D–H4733–00	LENS 1	1	1	1	1		
2	43D–H4121–00	LENS 1	1	1	1	1		
3	43D–H411B–00	GRAPHIC	1	1	1	1		
4	43D–H4191–00	GRAPHIC 2	1	1	1	1		
5	43D–H4111–00	BODY, HEADLIGHT	1	1	1	1		
6	43D–H4311–00	BODY, HEADLIGHT	1	1	1	1		
7	97004–06016	BOLT	4	4	4	4		
8	92904–06600	WASHER	4	4	4	4		

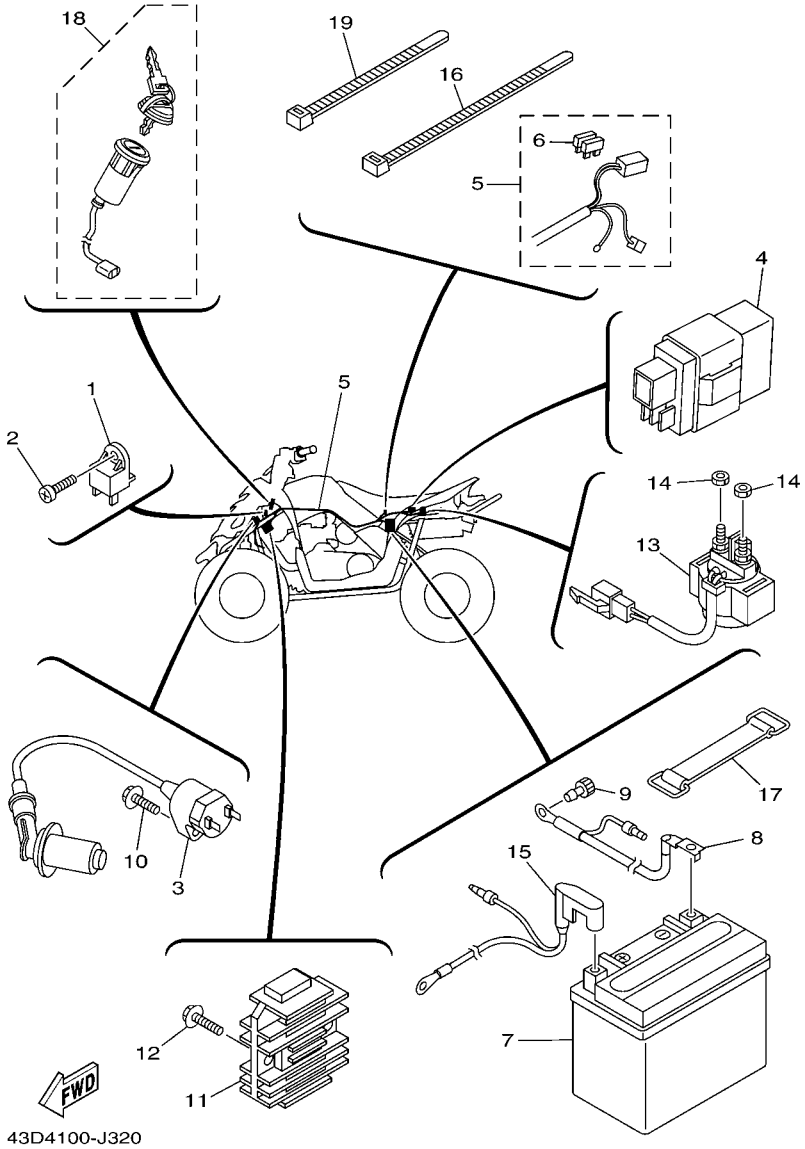

FIG. 32 ELECTRICAL 1

REF. NO.	PART NO.	DESCRIPTION	CAN	EUR	OCE	MEX		REMARKS
1	43D–H2560–00	THERMO SWITCH ASSY	1	1	1	1		
2	43D–F4473–00	SCREW	1	1	1	1		
3	43D–H2310–00	IGNITION COIL ASSY	1	1	1	1		
4	43D–H5540–00	C.D.I. UNIT ASSY	1	1	1	1		
5	43D–H2590–00	WIRE HARNESS ASSY	1	1	1	1		
6	43D–H2151–00	.FUSE	2	2	2	2		
7	43D–H2110–00	BATTERY ASSY (GTX5L-BS)	1	1	1	1		
8	43D–H2116–01	WIRE, MINUS LEAD	1	1	1	1		
9	43D–F2969–00	SCREW, 1	1	1	1	1		
10	43D–F1531–00	BOLT	1	1	1	1		
11	43D–H1960–00	RECTIFIER & REGULATOR ASSY	1	1	1	1		
12	95822–06016	BOLT, FLANGE	2	2	2	2		
13	43D–H1940–00	STARTER RELAY ASSY	1	1	1	1		
14	95307–06600	NUT	2	2	2	2		
15	43D–H2115–01	WIRE, PLUS LEAD	1	1	1	1		
16	43D–F2591–00	CLAMP, HOSE	1	1	1	1		
17	43D–F4398–00	BAND 1	1	1	1	1		
18	43D–H2510–01	MAIN SWITCH ASSY	1	1	1	1		
19	43D–F3466–00	CLAMP	4	4	4	4		

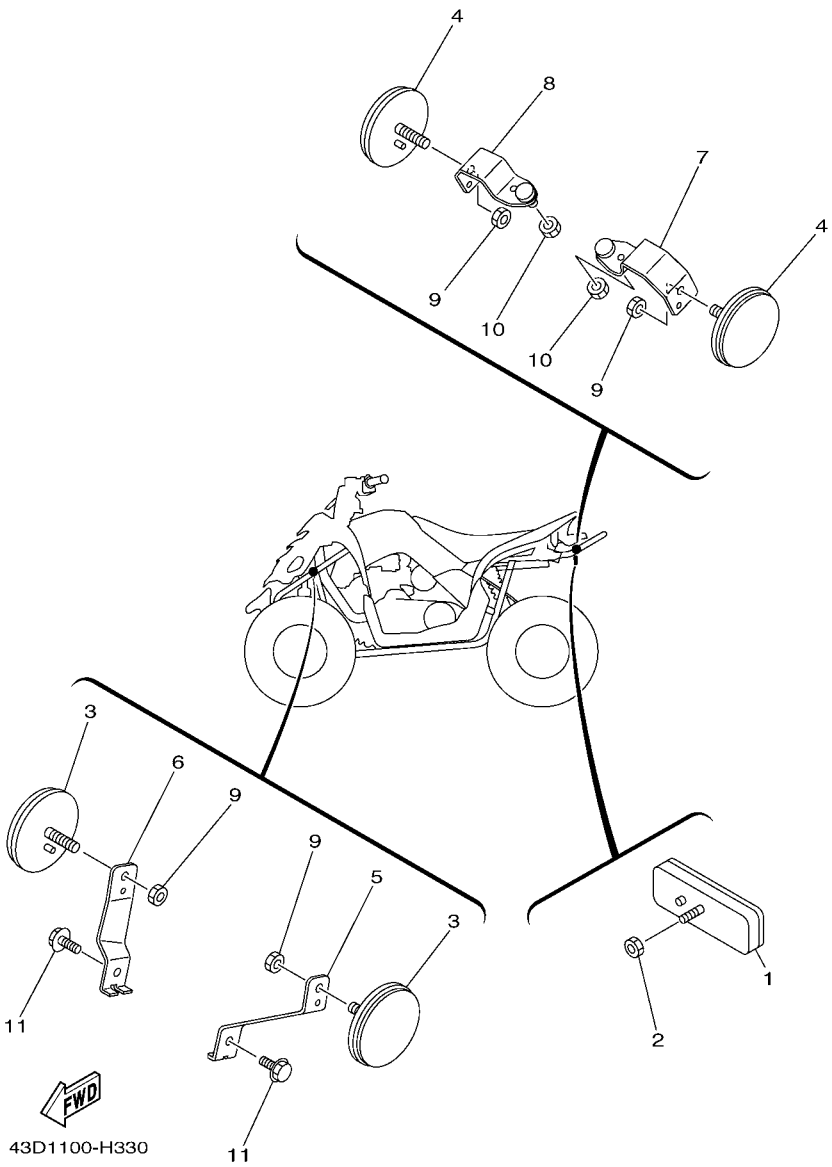

FIG. 33 ELECTRICAL 2

REF. NO.	PART NO.	DESCRIPTION	CAN	EUR	OCE	MEX		REMARKS
1	43D–H5130–00	REAR REFLECTOR ASSY	1	1	1	1		
2	95704–05500	NUT, FLANGE	1	1	1	1		
3	43D–H5111–00	REFLECTOR, FRONT 1	2					
4	43D–H5121–00	REFLECTOR, FRONT 2	2					
5	43D–F8321–00	STAY 1	1					
6	43D–F8322–00	STAY 2	1					
7	43D–F8356–00	STAY 1	1					
8	43D–F8357–00	STAY 2	1					
9	95307–06600	NUT	4					
10	43D–F1536–00	NUT 2	2					
11	95822–06016	BOLT, FLANGE	2					

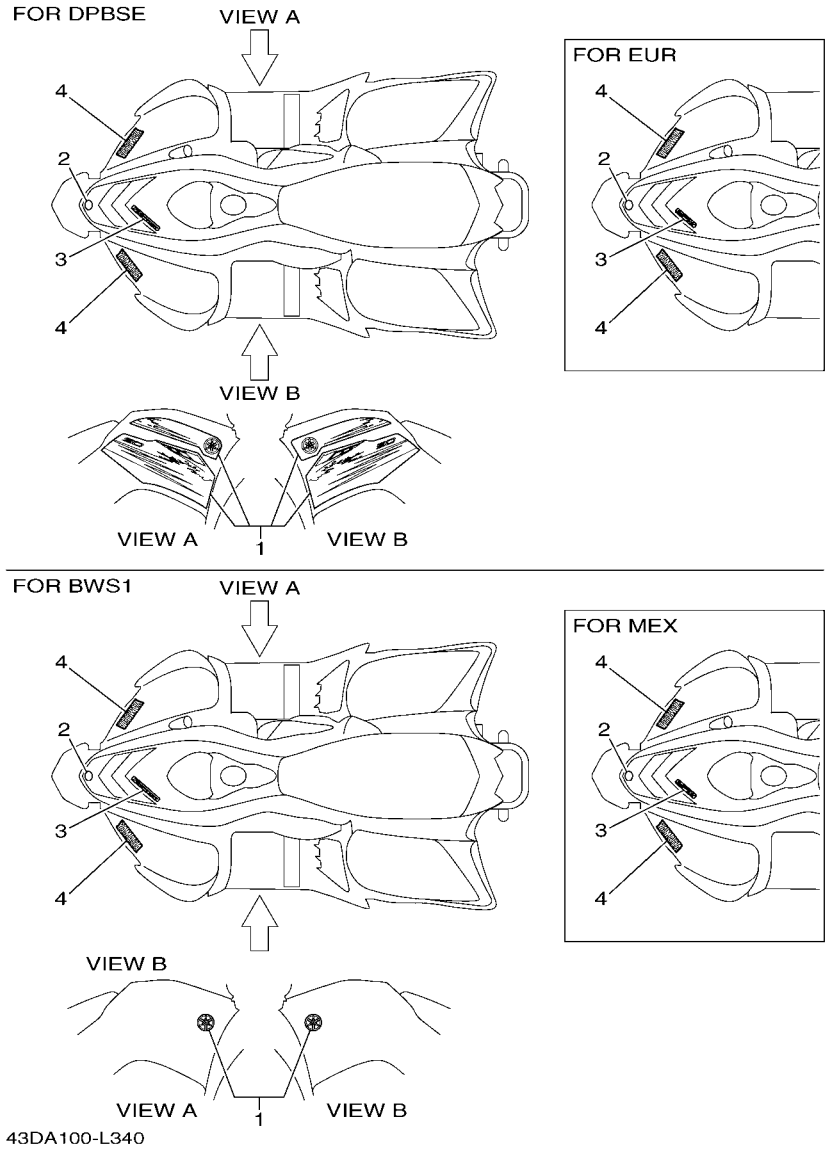

FIG. 34 GRAPHICS

REF. NO.	PART NO.	DESCRIPTION	CAN	EUR	OCE	MEX		REMARKS
1	43D–F4250–30	GRAPHIC SET 2	1	1	1	1		UR FOR DPBSE
	43D–F4250–10	GRAPHIC SET 2			1	1		UR FOR BWS1
2	43D–F175B–00	TUNING FORK MARK	1	1	1	1		
3	43D–F1565–30	EMBLEM, 2	1		1			
	43D–F1565–40	EMBLEM, 2		1		1		
4	43D–F153E–00	EMBLEM, YAMAHA	2	2	2	2		UR FOR DPBSE
	43D–F153E–10	EMBLEM, YAMAHA			2	2		UR FOR BWS1

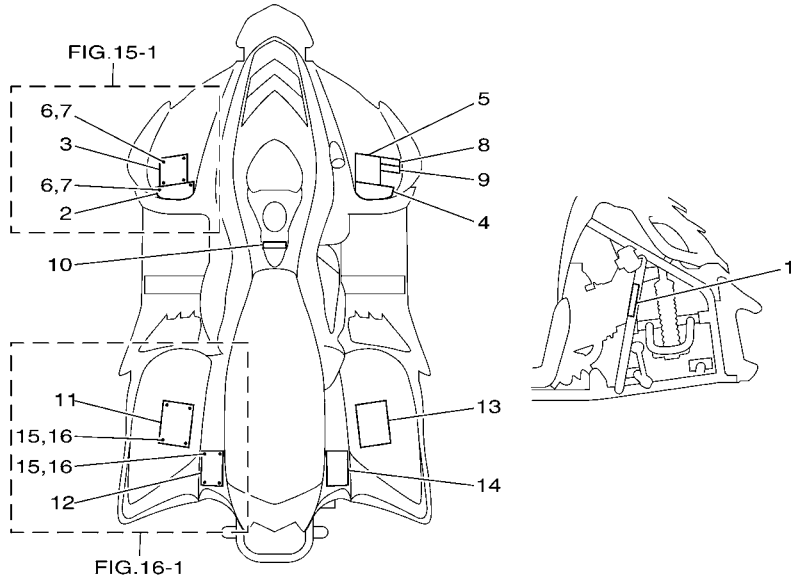

43D4100-J350

FIG. 35 EMBLEM & LABEL 1

REF. NO.	PART NO.	DESCRIPTION	CAN	EUR	OCE	MEX		REMARKS
1	43D–H2377–40	LABEL	1					
2	43D–F1568–00	LABEL, WARNING	1					
3	43D–F816L–00	LABEL, WARNING AGE	1					
4	43D–F1568–10	LABEL, WARNING	1					
5	43D–F816L–10	LABEL, WARNING AGE	1					
6	43D–F1128–00	RIVET	10					
7	43D–F1615–00	WASHER, SPECIAL 1	10					
8	43D–F817J–40	PLATE, ANSI SVIA	1					
9	43D–F817J–50	PLATE, ANSI SVIA	1					
10	43D–F416E–40	LABEL, CAUTION CANADA	1					
11	43D–F816M–60	LABEL, WARNING TIRE & LOAD	1					
12	43D–F151H–00	LABEL 5	1					
13	43D–F816M–10	LABEL, WARNING TIRE & LOAD	1					
14	43D–F151H–10	LABEL 5	1					
15	43D–F1128–00	RIVET	8					
16	43D–F1615–00	WASHER, SPECIAL 1	8					

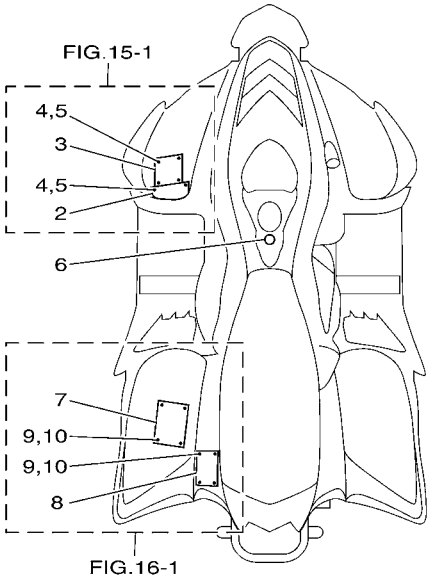

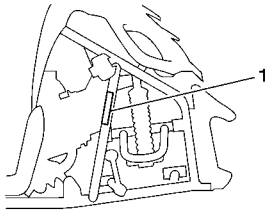

43D4100-J360

FIG. 36 EMBLEM & LABEL 2

REF. NO.	PART NO.	DESCRIPTION	CAN	EUR	OCE	MEX		REMARKS
1	43D–F156A–10	PLATE, MD		1		1		
2	43D–F816R–20	LABEL, WARNING GENERAL INFO.		1		1		
3	43D–F816L–50	LABEL, WARNING AGE		1		1		
4	43D–F1128–00	RIVET		10		10		
5	43D–F1615–00	WASHER, SPECIAL 1		10		10		
6	43D–F415E–50	LABEL, CAUTION		1		1		
7	43D–F816M–M0	LABEL, WARNING TIRE & LOAD		1		1		
8	43D–F816P–50	LABEL, WARNING PASSENGER		1		1		
9	43D–F1128–00	RIVET		8		8		
10	43D–F1615–00	WASHER, SPECIAL 1		8		8		

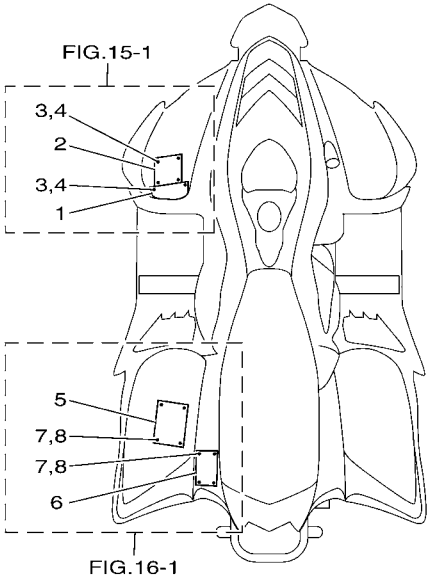

43D4100-J370

FIG. 37 EMBLEM & LABEL 3

REF. NO.	PART NO.	DESCRIPTION	CAN	EUR	OCE	MEX		REMARKS
1	43D–F1568–60	LABEL, WARNING			1			
2	43D–F816L–00	LABEL, WARNING AGE			1			
3	43D–F1128–00	RIVET			10			
4	43D–F1615–00	WASHER, SPECIAL 1			10			
5	43D–F816M–60	LABEL, WARNING TIRE & LOAD			1			
6	43D–F151H–00	LABEL 5			1			
7	43D–F1128–00	RIVET			8			
8	43D–F1615–00	WASHER, SPECIAL 1			8			

PART NO.	REF. NO.
5FU–83790–20	8 – 34
43D–E1102–00	1 – 1
43D–E1104–00	10 – 11
43D–E1126–00	7 – 21
43D–E1179–00	1 – 3
43D–E1181–00	1 – 4
43D–E1182–00	1 – 19
43D–E1188–00	10 – 12
43D–E1190–00	1 – 18
43D–E1195–00	1 – 13
43D–E119A–00	6 – 1
43D–E119B–00	1 – 24
43D–E1311–00	1 – 7
43D–E1351–00	1 – 10
43D–E1391–00	1 – 12
43D–E1392–00	1 – 6
43D–E1400–00	2 – 1
43D–E1541–00	10 – 21
43D–E1545–00	2 – 2
43D–E1557–00	10 – 16
43D–E1558–00	11 – 1
43D–E1610–00	2 – 6
43D–E1631–00	2 – 3
43D–E1633–00	2 – 4
43D–E1634–00	2 – 5
43D–E1834–00	11 – 11
43D–E2111–00	3 – 1
43D–E2113–00	3 – 6
43D–E2114–00	3 – 5
43D–E2117–00	3 – 7
43D–E2118–00	3 – 8
43D–E2119–00	3 – 3
43D–E2121–00	3 – 2
43D–E2146–00	3 – 12
43D–E2151–00	3 – 9
43D–E2156–00	3 – 13
43D–E2157–00	10 – 4
43D–E2159–00	3 – 10
43D–E2173–00	1 – 15
43D–E2174–00	1 – 11
43D–E2190–00	4 – 5
43D–E21K0–00	4 – 8
43D–E2210–00	4 – 2
43D–E2213–00	4 – 3
43D–E2228–00	10 – 10
43D–E2231–00	4 – 6
43D–E2241–00	4 – 4
43D–E2289–00	11 – 7

PART NO.	REF. NO.
43D–E2289–00	17 – 9
43D–E22C0–00	4 – 7
43D–E2456–00	11 – 16
43D–E2467–00	15 – 12
43D–E2601–00	5 – 4
43D–E2611–00	29 – 2
43D–E2614–00	13 – 24
43D–E2615–00	10 – 29
43D–E261B–00	5 – 2
43D–E261C–00	5 – 7
43D–E261D–00	5 – 10
	5 – 14
43D–E261F–00	5 – 11
	5 – 16
43D–E261G–00	5 – 17
43D–E261H–00	5 – 25
43D–E261J–00	5 – 13
43D–E261K–00	5 – 21
43D–E2620–00	5 – 9
43D–E2623–00	14 – 5
	19 – 21
43D–E262K–00	5 – 23
	16 – 17
43D–E2650–00	5 – 12
43D–E2659–00	5 – 5
43D–E2660–00	5 – 1
43D–E2664–00	11 – 19
43D–E2668–00	5 – 6
43D–E2671–00	9 – 7
43D–E2672–00	12 – 12
43D–E2673–00	12 – 22
43D–E2674–00	13 – 25
43D–E2842–00	13 – 9
43D–E3177–00	1 – 8
43D–E319C–00	6 – 11
43D–E3300–00	6 – 3
43D–E3318–00	1 – 16
43D–E3325–00	6 – 6
43D–E3342–00	11 – 9
43D–E3411–00	6 – 8
43D–E3469–00	6 – 9
43D–E3516–00	1 – 5
43D–E3556–00	1 – 21
43D–E3569–00	1 – 26
43D–E3573–00	14 – 12
43D–E3574–00	9 – 5
43D–E3575–00	1 – 25
43D–E3578–00	3 – 4

PART NO.	REF. NO.
43D–E3588–00	12 – 23
	29 – 3
43D–E3590–00	1 – 23
43D–E3889–00	5 – 3
43D–E3995–00	11 – 5
43D–E4137–10	7 – 10
43D–E4148–00	7 – 15
43D–E4149–00	7 – 16
43D–E4159–00	7 – 13
	7 – 17
43D–E4169–00	7 – 22
43D–E41A1–00	7 – 9
43D–E4216–00	5 – 8
43D–E4222–00	7 – 14
43D–E4271–00	1 – 22
5LB–E4275–00	8 – 12
43D–E4285–00	13 – 5
5WB–E4286–00	8 – 14
43D–E4301–00	8 – 1
43D–E4301–10	8 – 1
43D–E4304–00	8 – 32
43D–E4306–00	8 – 21
43D–E4307–00	8 – 36
43D–E4310–00	8 – 37
43D–E4321–00	8 – 3
43D–E4321–10	8 – 28
43D–E4325–00	5 – 18
43D–E432A–00	8 – 33
43D–E4333–00	8 – 4
43D–E4333–10	8 – 27
43D–E4336–00	8 – 13
43D–E4336–10	8 – 13
43D–E4341–00	8 – 8
43D–E4342–16	8 – 6
288–E4343–50	8 – 9
43D–E4344–00	8 – 16
43D–E4345–00	8 – 2
43D–E4346–00	8 – 26
43D–E4347–00	8 – 7
4FP–E4349–00	8 – 24
5WB–E434A–00	8 – 10
43D–E4358–00	1 – 27
	6 – 7
5WB–E4384–00	8 – 20
5WB–E4385–00	8 – 18
5LB–E4386–00	8 – 19
43D–E4392–00	8 – 17
43D–E4397–10	8 – 29

PART NO.	REF. NO.
43D–E4398–00	8 – 30
43D–E439D–00	8 – 15
43D–E440H–00	7 – 5
43D–E4410–10	7 – 1
43D–E4419–00	7 – 7
43D–E4429–10	7 – 11
43D–E442F–00	7 – 20
43D–E4439–00	1 – 17
43D–E443E–10	7 – 6
43D–E443G–00	8 – 23
43D–E4451–00	7 – 3
43D–E4455–00	7 – 8
43D–E4468–10	7 – 4
43D–E4475–00	5 – 20
43D–E449C–00	7 – 18
43D–E449D–00	7 – 19
43D–E449E–10	7 – 2
43D–E4565–00	9 – 12
	16 – 8
43D–E4567–00	5 – 15
43D–E4594–00	12 – 2
5AV–E4594–00	8 – 25
43D–E4595–00	9 – 6
43D–E4610–00	9 – 1
43D–E461A–00	9 – 2
43D–E4752–00	9 – 3
43D–E4759–00	9 – 13
43D–E4773–00	9 – 4
43D–E4803–00	9 – 8
43D–E48A0–00	9 – 14
43D–E48D0–00	9 – 9
43D–E4919–00	9 – 10
	9 – 15
5LB–E4936–00	8 – 11
43D–E5100–00	10 – 1
43D–E5114–00	10 – 14
43D–E511A–00	10 – 25
43D–E511B–00	10 – 18
43D–E511C–00	10 – 28
43D–E5181–00	6 – 2
	10 – 7
	10 – 26
43D–E5199–00	10 – 9
43D–E5300–00	6 – 10
43D–E5314–00	10 – 2
43D–E5341–00	10 – 20
43D–E5363–00	10 – 13
43D–E536A–00	10 – 27

PART NO.	REF. NO.
43D–E5411–00	10 – 5
43D–E5418–00	10 – 33
43D–E5421–00	10 – 23
43D–E5461–00	10 – 24
43D–E5470–00	10 – 31
43D–E54F3–00	10 – 32
43D–E5524–00	11 – 4
43D–E5526–00	10 – 3
43D–E5532–00	11 – 10
43D–E5538–00	11 – 2
43D–E5561–00	10 – 19
43D–E5570–00	11 – 6
43D–E5582–00	10 – 15
	13 – 13
43D–E5596–00	11 – 3
43D–E5597–00	11 – 17
43D–E5600–00	11 – 12
43D–E5620–00	11 – 21
43D–E5640–00	11 – 8
43D–E5650–00	11 – 18
43D–E5657–00	12 – 21
43D–E5665–00	11 – 13
43D–E5666–00	11 – 15
43D–E5677–00	11 – 14
43D–E5744–00	13 – 22
43D–E5793–00	7 – 12
43D–E6611–00	12 – 3
43D–E6620–00	12 – 1
43D–E6773–00	11 – 20
43D–E7156–00	13 – 21
43D–E7166–00	10 – 22
43D–E7410–00	13 – 19
43D–E7412–00	13 – 7
43D–E7413–00	13 – 15
43D–E7420–00	13 – 16
43D–E7422–00	13 – 17
43D–E7423–00	13 – 18
43D–E7431–00	13 – 20
43D–E7461–00	13 – 3
43D–E7464–00	13 – 2
43D–E7465–00	13 – 8
43D–E7471–09	13 – 10
43D–E7498–00	13 – 14
43D–E7499–00	13 – 23
43D–E7518–09	13 – 26
43D–E7611–00	12 – 19
43D–E7620–00	12 – 15
43D–E7623–00	12 – 17

PART NO.	REF. NO.
43D–E7632–00	12 – 16
43D–E7641–00	12 – 20
43D–E7645–00	12 – 14
43D–E7653–00	12 – 18
43D–E7660–00	12 – 4
43D–E7664–00	12 – 5
43D–E7670–00	12 – 7
43D–E7683–00	12 – 10
43D–E7684–00	12 – 11
43D–E76F3–00	12 – 6
43D–E76F4–00	12 – 8
43D–E76F5–00	12 – 9
43D–E76F6–00	12 – 13
43D–F1110–01	14 – 1
43D–F1116–00	10 – 35
43D–F1128–00	35 – 6
	35 – 15
	36 – 4
	36 – 9
	37 – 3
	37 – 7
43D–F112C–00	14 – 13
43D–F112N–00	22 – 25
	22 – 50
43D–F113B–00	14 – 18
43D–F11C1–00	14 – 3
43D–F11C2–00	14 – 4
43D–F11C3–00	14 – 7
43D–F11C5–00	21 – 4
43D–F11C8–00	26 – 2
43D–F11C9–00	26 – 6
43D–F1244–00	19 – 2
43D–F1279–00	14 – 2
43D–F1289–00	14 – 19
43D–F1293–00	22 – 24
	22 – 49
43D–F1410–00	14 – 6
43D–F1459–00	14 – 8
43D–F1471–00	14 – 16
43D–F1494–00	14 – 11
43D–F1500–00	15 – 1
43D–F1500–20	15 – 1
43D–F1500–90	15 – 1
43D–F1500–B0	15 – 1
43D–F1500–C0	15 – 1
43D–F1513–00	14 – 14
43D–F151H–00	35 – 12
	37 – 6

PART NO.	REF. NO.
43D–F151H–10	35 – 14
43D–F1531–00	32 – 10
43D–F1532–00	29 – 7
43D–F1535–00	17 – 5
	18 – 5
43D–F1536–00	15 – 2
	16 – 4
	33 – 10
43D–F153E–00	34 – 4
43D–F153E–10	34 – 4
43D–F1549–00	14 – 10
43D–F1556–00	15 – 11
43D–F1565–30	34 – 3
43D–F1565–40	34 – 3
43D–F1568–00	35 – 2
43D–F1568–10	35 – 4
43D–F1568–60	37 – 1
43D–F156A–10	36 – 1
43D–F15A3–00	21 – 6
43D–F1600–20	16 – 1
43D–F1600–30	16 – 1
43D–F1600–80	16 – 1
43D–F1600–90	16 – 1
43D–F1615–00	35 – 7
	35 – 16
	36 – 5
	36 – 10
	37 – 4
	37 – 8
43D–F1631–00	24 – 13
43D–F1632–00	14 – 9
43D–F1635–00	18 – 10
	18 – 26
	19 – 20
	23 – 6
43D–F1636–00	23 – 7
43D–F1639–00	16 – 10
43D–F1649–00	16 – 13
	20 – 21
43D–F164F–00	16 – 7
43D–F1711–00	16 – 15
43D–F171A–00	15 – 9
43D–F1721–00	16 – 14
43D–F1722–00	17 – 4
43D–F1738–00	23 – 15
43D–F1739–00	25 – 8
43D–F175B–00	34 – 2
43D–F1791–00	18 – 14

PART NO.	REF. NO.
43D–F1791–00	18 – 19
43D–F1823–00	14 – 17
	26 – 15
43D–F1829–00	18 – 15
	18 – 20
43D–F1839–00	22 – 57
	23 – 16
43D–F1968–00	25 – 9
43D–F2100–00	17 – 1
43D–F210L–00	17 – 11
43D–F2125–10	9 – 11
	27 – 6
43D–F2126–00	17 – 2
43D–F2128–00	17 – 3
43D–F2143–00	22 – 22
	22 – 47
43D–F2149–00	22 – 16
	22 – 41
43D–F2151–10	17 – 22
43D–F2169–00	17 – 18
43D–F2176–00	17 – 16
43D–F2178–00	17 – 13
43D–F2183–00	17 – 12
43D–F2210–00	17 – 24
43D–F2210–10	17 – 24
43D–F2241–00	22 – 21
	22 – 46
43D–F2243–00	23 – 18
43D–F2244–00	26 – 13
	26 – 18
43D–F2245–00	22 – 23
	22 – 48
43D–F2246–00	15 – 3
	16 – 5
43D–F2251–00	22 – 17
	22 – 42
43D–F2277–00	26 – 5
43D–F2312–00	17 – 20
43D–F2334–00	17 – 7
43D–F2361–00	17 – 6
43D–F2362–00	17 – 8
43D–F244H–00	26 – 12
	26 – 17
43D–F2591–00	32 – 16
43D–F2969–00	32 – 9
43D–F3119–00	15 – 10
43D–F3183–00	13 – 4
43D–F3346–00	25 – 10

PART NO.	REF. NO.
43D–F3350–00	19 – 1
43D–F3350–10	19 – 1
43D–F3356–00	27 – 3
43D–F3357–00	25 – 16
43D–F3363–00	19 – 5
	19 – 8
43D–F3364–00	19 – 11
	19 – 14
43D–F3394–00	17 – 23
43D–F3427–00	17 – 19
43D–F3436–00	28 – 4
43D–F3441–00	18 – 23
43D–F3442–00	18 – 22
43D–F3447–00	16 – 9
43D–F344A–00	18 – 24
43D–F3456–00	17 – 15
43D–F3459–00	23 – 5
43D–F3466–00	32 – 19
43D–F3471–00	19 – 19
43D–F3492–00	23 – 25
43D–F3505–00	19 – 3
43D–F3506–00	19 – 6
43D–F3507–00	19 – 9
43D–F3508–00	19 – 12
43D–F3511–00	22 – 19
43D–F3512–01	22 – 20
43D–F3521–00	22 – 44
43D–F3522–01	22 – 45
43D–F3526–00	19 – 4
	19 – 7
	19 – 10
	19 – 13
43D–F3774–00	18 – 21
43D–F3778–00	25 – 17
43D–F3812–00	18 – 7
43D–F3813–01	18 – 1
43D–F3831–00	18 – 11
	18 – 16
43D–F3833–00	26 – 10
43D–F3834–00	15 – 15
43D–F3841–01	18 – 12
	18 – 17
43D–F3844–00	18 – 2
43D–F3845–01	18 – 13
	18 – 18
43D–F3872–00	18 – 8
43D–F38B1–00	18 – 3
43D–F38B2–00	18 – 4

PART NO.	REF. NO.
43D–F4110–00	20 – 1
43D–F4110–10	20 – 1
43D–F411M–00	20 – 7
	20 – 10
43D–F412G–00	20 – 15
43D–F415E–50	36 – 6
43D–F416E–40	35 – 10
43D–F417E–00	20 – 18
43D–F4181–00	20 – 20
43D–F41B4–01	20 – 3
43D–F41B5–00	20 – 5
43D–F41B5–10	20 – 5
43D–F41B6–00	20 – 8
43D–F41B6–10	20 – 8
43D–F4250–10	34 – 1
43D–F4250–30	34 – 1
43D–F432A–00	20 – 11
43D–F4339–00	20 – 14
43D–F4366–00	20 – 6
	20 – 9
43D–F4391–00	17 – 17
43D–F4398–00	14 – 23
	32 – 17
43D–F4399–00	14 – 21
43D–F4441–00	22 – 2
	22 – 27
43D–F4444–00	15 – 4
	16 – 6
43D–F4453–00	15 – 13
43D–F4473–00	32 – 2
43D–F4474–00	15 – 14
43D–F4500–10	20 – 13
43D–F4560–00	20 – 4
43D–F4560–10	20 – 4
43D–F4561–00	20 – 12
43D–F4670–01	20 – 2
43D–F4710–00	21 – 1
43D–F4760–00	21 – 3
43D–F4771–00	21 – 2
43D–F5105–00	22 – 4
	22 – 29
43D–F510L–00	22 – 9
	22 – 34
43D–F510S–00	22 – 51
	22 – 55
43D–F5111–00	22 – 1
	22 – 26
43D–F5117–00	22 – 3

PART NO.	REF. NO.
43D–F5117–00	22 – 28
43D–F511B–00	22 – 7
	22 – 32
43D–F5121–00	22 – 13
43D–F5133–00	22 – 10
	22 – 35
43D–F5143–00	22 – 18
	22 – 43
43D–F5155–00	22 – 14
43D–F5156–00	22 – 39
43D–F5169–00	22 – 38
43D–F5170–00	22 – 53
	22 – 56
	23 – 13
43D–F5180–00	22 – 52
	22 – 54
43D–F51H1–00	22 – 5
	22 – 30
43D–F51H2–00	22 – 6
	22 – 31
43D–F51H3–00	22 – 8
	22 – 33
43D–F51H4–00	22 – 12
	22 – 37
43D–F5311–01	23 – 20
43D–F5317–00	23 – 21
43D–F5351–00	22 – 11
	22 – 36
43D–F537Y–00	23 – 23
43D–F5381–00	23 – 1
43D–F5382–00	23 – 17
43D–F5383–00	23 – 14
43D–F5386–00	23 – 3
43D–F5388–00	17 – 10
43D–F5390–00	23 – 12
43D–F53C0–00	23 – 8
43D–F53N3–00	23 – 9
43D–F53N4–00	23 – 22
43D–F53N5–00	26 – 14
43D–F53P3–00	23 – 11
43D–F5412–00	23 – 10
43D–F5415–00	13 – 6
43D–F5420–00	23 – 2
43D–F5438–00	23 – 4
43D–F5683–00	23 – 24
43D–F5689–00	25 – 27
43D–F5712–00	24 – 11
43D–F5726–00	25 – 23

PART NO.	REF. NO.
43D–F5727–00	25 – 22
43D–F580V–01	24 – 1
43D–F5824–00	24 – 3
43D–F5825–00	24 – 4
43D–F582V–01	24 – 10
43D–F5833–00	24 – 12
43D–F583V–00	26 – 1
43D–F5852–00	26 – 3
43D–F5854–00	26 – 4
43D–F5867–00	26 – 7
43D–F5874–01	26 – 16
43D–F5876–00	24 – 14
43D–F5906–01	24 – 2
43D–F5917–00	24 – 7
43D–F5919–00	24 – 5
43D–F5921–01	24 – 8
43D–F5937–00	24 – 6
43D–F5972–00	24 – 9
43D–F6111–01	25 – 2
43D–F6113–00	25 – 24
43D–F6124–00	25 – 1
43D–F6241–00	25 – 3
43D–F6250–01	25 – 4
43D–F628F–00	25 – 6
43D–F628G–00	25 – 7
43D–F6311–01	25 – 19
43D–F6314–00	26 – 8
43D–F6331–00	26 – 19
43D–F6332–00	25 – 12
43D–F6337–00	25 – 15
43D–F6340–00	25 – 20
43D–F6341–10	25 – 29
43D–F6347–00	25 – 14
43D–F6350–00	25 – 21
43D–F6382–00	25 – 11
43D–F6393–00	25 – 25
43D–F7114–00	21 – 5
43D–F7213–00	25 – 18
43D–F7445–00	27 – 5
43D–F7453–00	27 – 2
43D–F7463–00	27 – 1
43D–F7471–00	27 – 4
43D–F8100–00	14 – 20
43D–F811A–01	14 – 22
43D–F816L–00	35 – 3
	37 – 2
43D–F816L–10	35 – 5
43D–F816L–50	36 – 3

PART NO.	REF. NO.
43D–F816M–10	35 – 13
43D–F816M–60	35 – 11
	37 – 5
43D–F816M–M0	36 – 7
43D–F816P–50	36 – 8
43D–F816R–20	36 – 2
43D–F817J–40	35 – 8
43D–F817J–50	35 – 9
43D–F8321–00	33 – 5
43D–F8322–00	33 – 6
43D–F8354–00	25 – 26
43D–F8355–00	25 – 28
43D–F8356–00	33 – 7
43D–F8357–00	33 – 8
43D–F845N–00	28 – 3
43D–F845R–00	28 – 1
43D–H1145–00	25 – 5
43D–H1800–00	30 – 2
43D–H182M–00	30 – 3
43D–H1940–00	32 – 13
43D–H1960–00	32 – 11
43D–H2110–00	32 – 7
43D–H2115–01	32 – 15
43D–H2116–01	32 – 8
43D–H2151–00	32 – 6
43D–H2310–00	32 – 3
43D–H2377–40	35 – 1
43D–H2510–01	32 – 18
43D–H2550–00	26 – 9
43D–H2560–00	32 – 1
43D–H2590–00	32 – 5
43D–H259E–00	26 – 21
43D–H331N–01	8 – 38
43D–H3912–00	26 – 11
43D–H3922–01	25 – 13
43D–H3941–00	26 – 22
43D–H3975–00	26 – 20
43D–H4111–00	31 – 5
43D–H411B–00	31 – 3
43D–H4121–00	31 – 2
43D–H4191–00	31 – 4
43D–H4311–00	31 – 6
43D–H4733–00	31 – 1
43D–H5111–00	33 – 3
43D–H5121–00	33 – 4
43D–H5130–00	33 – 1
43D–H5510–00	29 – 6
43D–H5540–00	32 – 4

PART NO.	REF. NO.
43D–H5550–00	29 – 4
90201–08016	8 – 35
90467–22097	20 – 19
91314–06025	18 – 25
91401–25020	17 – 26
	18 – 9
	19 – 16
91401–25033	19 – 18
	23 – 19
92904–06600	15 – 6
	31 – 8
92907–06600	15 – 8
	16 – 3
	16 – 12
	20 – 17
94701–00366	1 – 2
95022–06012	10 – 8
95022–06016	4 – 1
	5 – 24
	29 – 1
95022–06020	6 – 5
	29 – 5
95022–06035	10 – 6
95022–06040	30 – 1
95022–06100	1 – 14
	10 – 30
95027–06020	1 – 20
	5 – 19
	6 – 4
95302–10900	19 – 17
95307–05600	3 – 11
95307–06600	32 – 14
	33 – 9
95704–05500	33 – 2
95822–06016	32 – 12
	33 – 11
95822–08012	10 – 17
95822–08035	13 – 11
95822–08040	13 – 12
95827–06012	1 – 9
	16 – 16
	24 – 15
95827–06016	10 – 34
95827–06025	5 – 22
95827–08012	14 – 15
	28 – 2
95827–08016	17 – 21
97004–06016	15 – 5

PART NO.	REF. NO.
97004–06016	31 – 7
97007–06020	15 – 7
	16 – 2
	16 – 11
97007–06030	20 – 16
97022–06010	13 – 1
97022–06030	22 – 15
	22 – 40
97022–08060	18 – 6
97027–10040	17 – 25
	19 – 15
98502–04008	8 – 5
98502–04010	8 – 31
98502–04014	8 – 22
99002–10600	17 – 14

PART NO.	REF. NO.

PART NO.	REF. NO.

PART NO.	REF. NO.